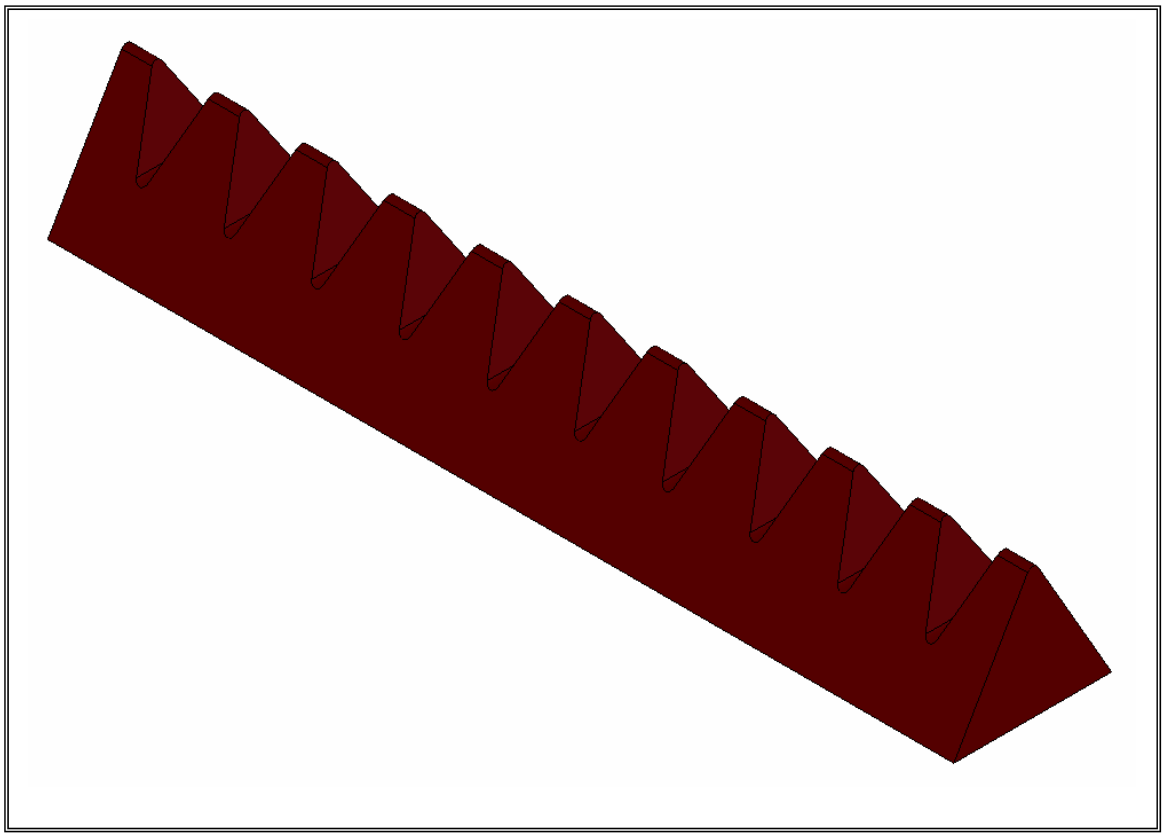

Computer Aided Design – Module 2

Lesson – Toblerone Bar

Lesson ? – Toblerone Bar

New Commands used: **Polygon, Add Relations, Smart Dimension, Extrude Boss/Base (Mid Plane), Fillet, Line, Extrude-Cut, Linear Pattern & Edit Color.**

Approach:

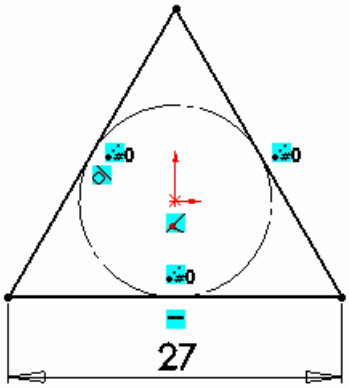

Create Sketch — Create the sketch shown on the right plane.

Select **Polygon** from the sketch toolbar.

- Choose **3** as the **Number of sides**.
- Select the origin as the centre of the inscribed circle.

Add Relation — Add a **Horizontal Relation** to the base.

Smart Dimension — **Fully Define** the sketch using only the dimension displayed.

Extruded Boss/Base — Extrude the sketch using a **Mid Plane End Condition** of **depth** 155mm.

Fillet — Apply a 1mm **Fillet** to the top edge as shown.

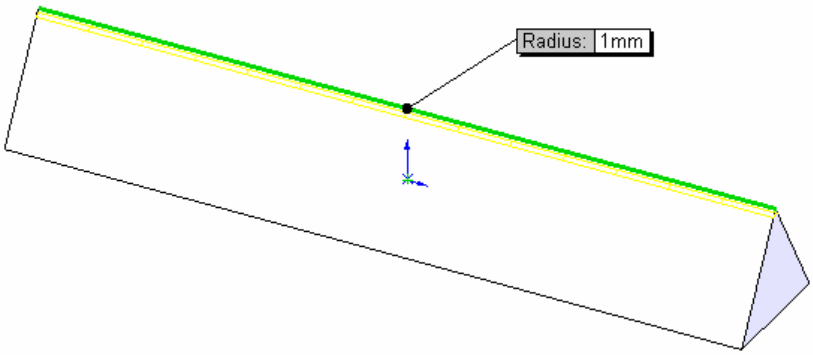

Adding the Notches

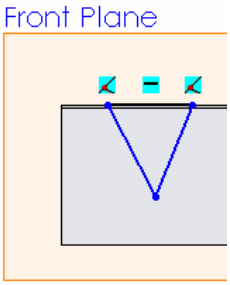

Sketch on the Front Plane — Using the **Line** command, create the sketch on the front plane of the triangle (shown across).
All relations are **Automatic Relations**.

Add Relation (below) — Add an **Equal Relation** to the two inclined sides.
Add a **Horizontal Relation** between the origin and the lower vertex of the triangle.

Smart Dimension — **Fully Define** the sketch using the dimensions displayed.

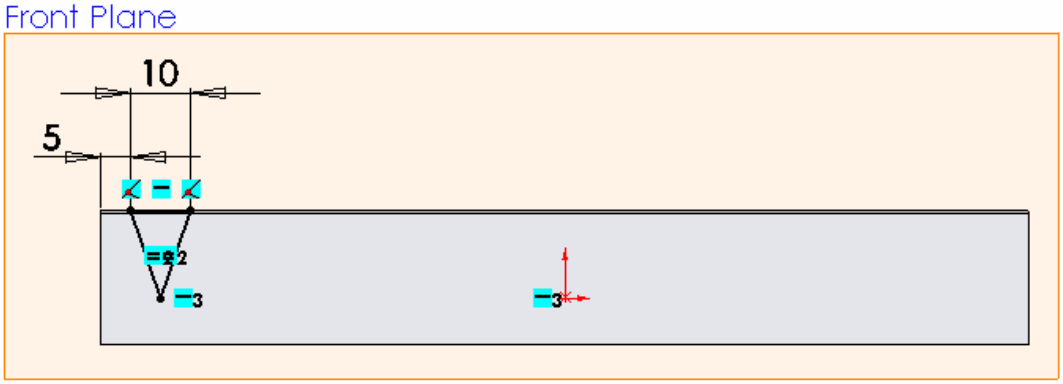

Extruded-Cut

Extrude the sketch using **Extrude-Cut**.

- Extrude in **Direction 1** using a **Through All End Condition**.
- Extrude in **Direction 2** using a **Through All End Condition**.

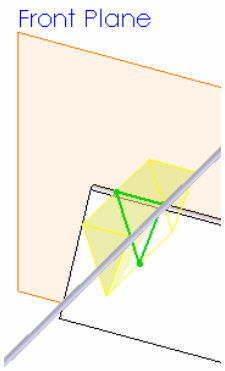

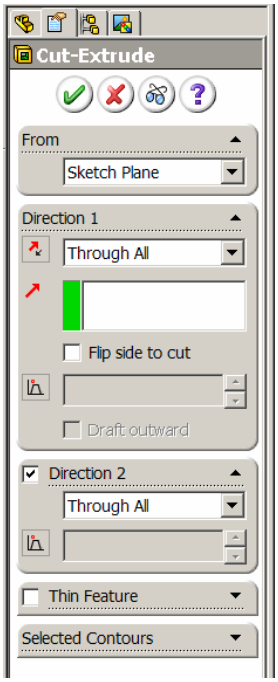

Fillet

Apply a 1mm **Fillet** to the edge of the notch as shown.

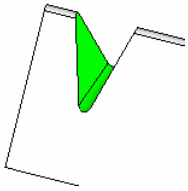

Linear Pattern

Select **Linear Pattern** from the **Features** toolbar.

- Select the linear edge of the base as **Direction 1**.
- Input a **Spacing** of **15mm**.
- Input **10** as the **Number of Instances**.

Click in the **Features to Pattern** window.

Expand the **Feature Manager Design Tree**.

- Select the **Notch** and the **Fillet notch** as the **Features to Pattern**.

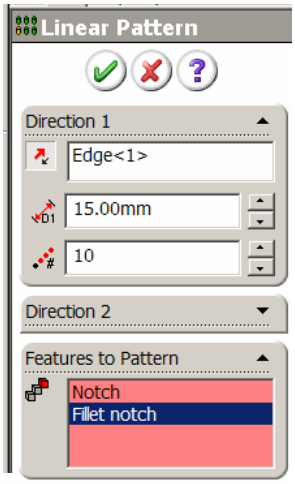

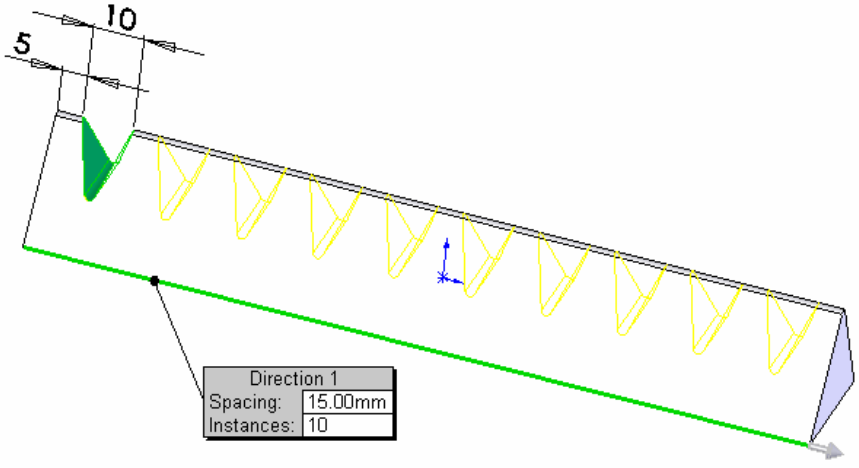

Edit Color

Choose a suitable colour from the **Edit Color** palette.

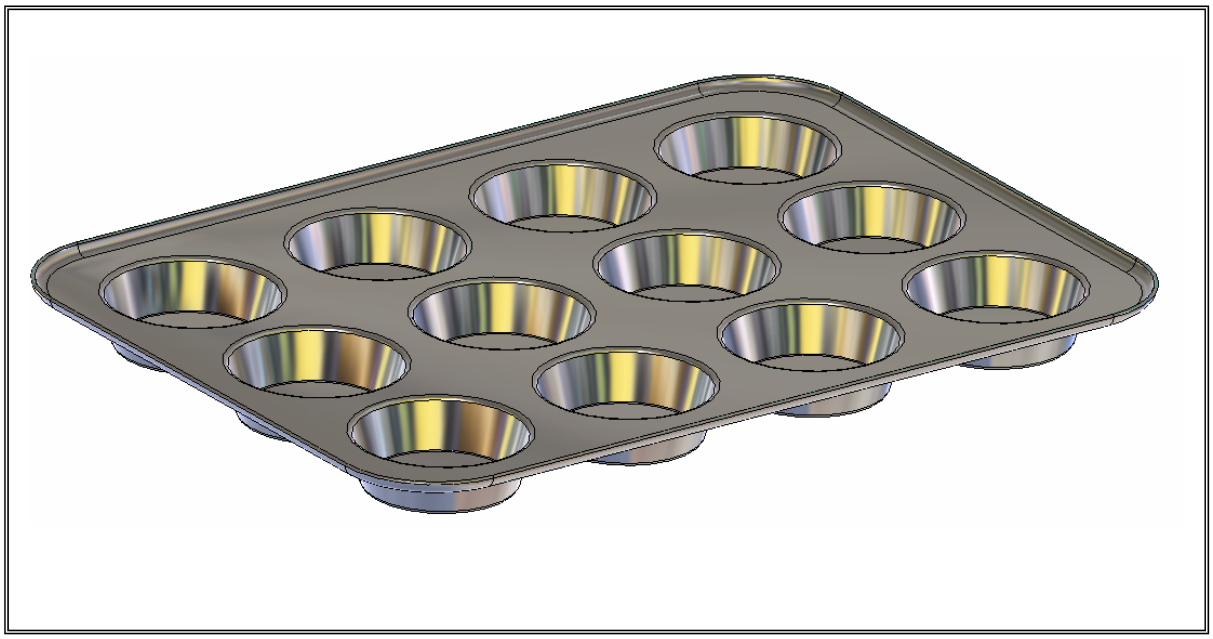

Computer Aided Design – Module 2

Lesson – Baking Tray

Lesson 1 – Baking Tray

Commands used: **Sketch Rectangle, Sketch Fillet, Circle, Smart dimension, Extrude Boss/Base, Linear Pattern, Shell, Fillet & Edit Material**

Approach to Lesson:

Create sketch top of tray

Create the sketch on the **Top Plane** using the Rectangle sketch command.

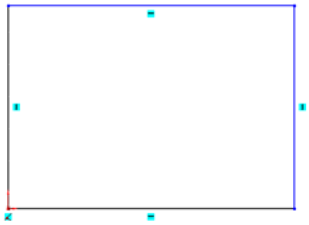

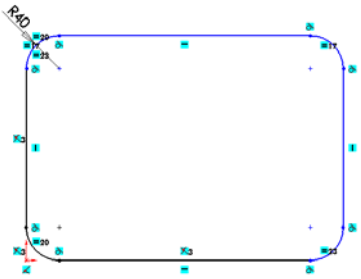

Use **Sketch Fillet** to apply a fillet of 40mm to the corners

Use Smart Dimension to dimension the sketch

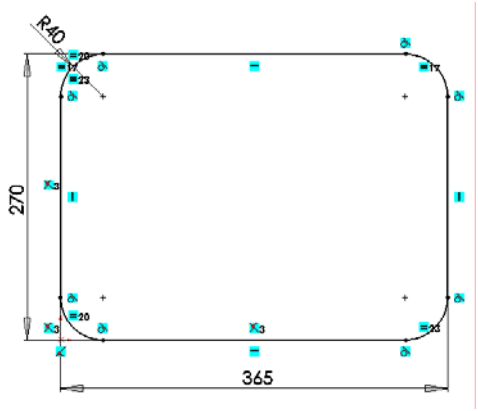

Extruded Boss/Base

Extrude the sketch using **Extruded Boss/Base**
Select **Blind** as the end condition and a distance of 6mm.

Rename the feature as ‘Top of tray’.

Create sketch for cup

Select the top face of the tray as the plane for this sketch

Sketch with **Circle** and **Smart Dimension**

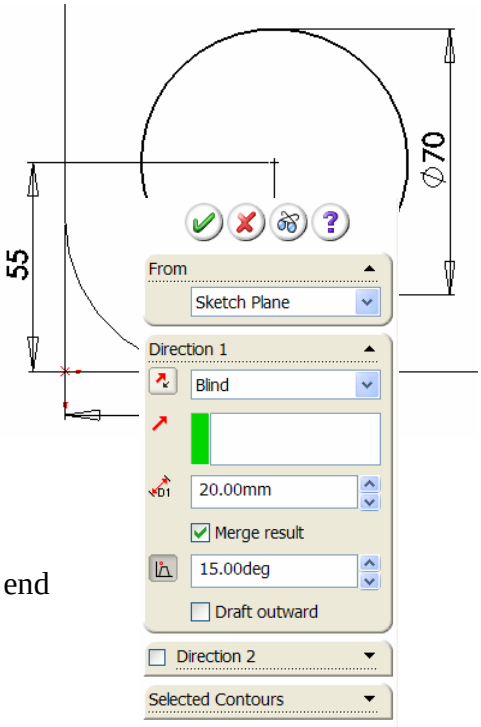

Extruded Boss/Base for Cup

Extrude the sketch using **Blind** as the end

condition and a distance of 20mm.

Select a draft angle of 15°.

Rename the feature as ‘Cup’

Apply Fillet to Cup

Apply a 2mm fillet to the base edge of the cup using the Fillet feature

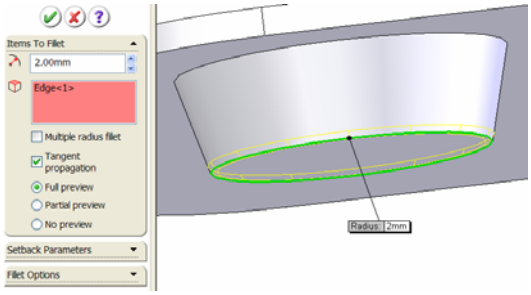

Rename the feature as ‘Fillet at base of cup’.

Linear Pattern of Cup

Use **Linear Pattern** to create the other cups using the criteria shown below.

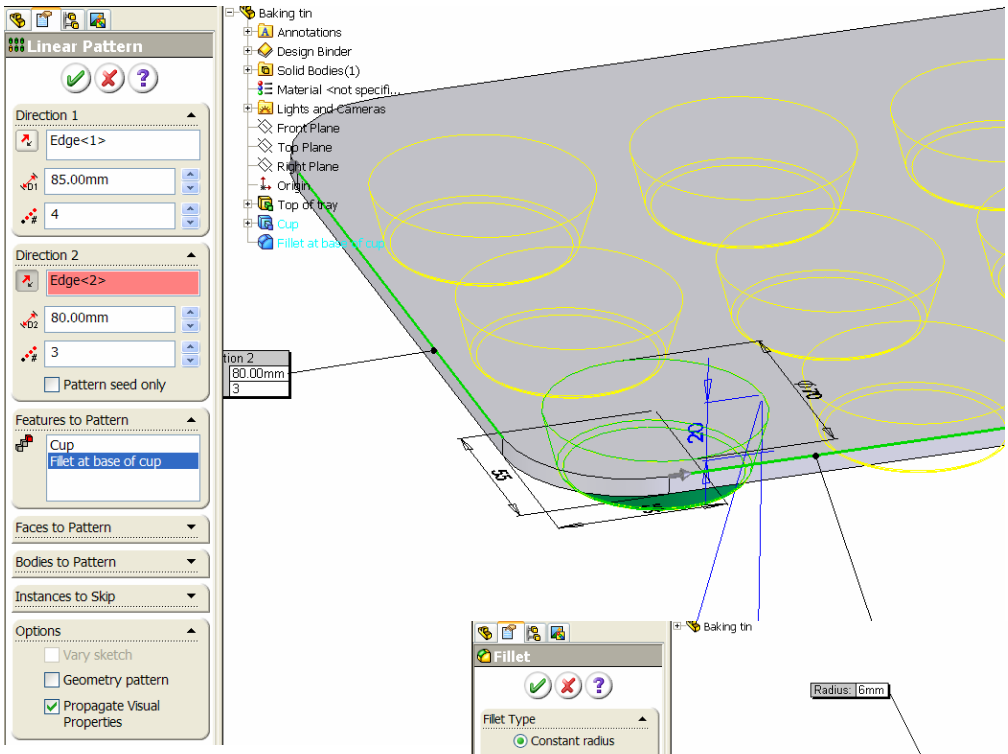

Rename feature as ‘Cup patterned’

Apply fillet edge of Tray top

Apply a 6mm fillet to the

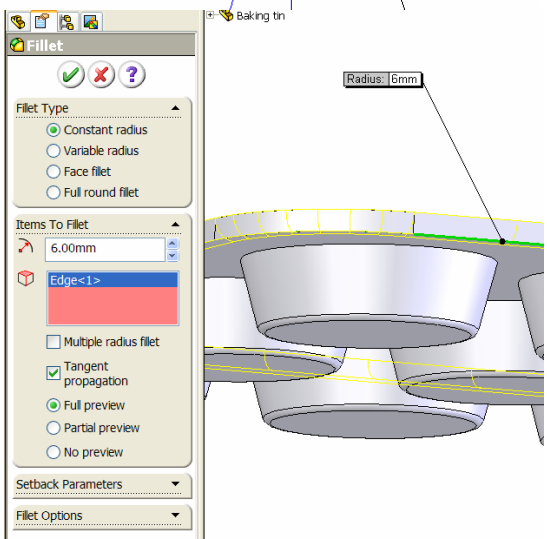

bottom edge of the top of the tray.

Rename the feature as ‘6mm edge fillet’.

Shell the tray

Apply a wall thickness of 1.5mm and remove the top face

Rename the feature as ‘Tray shelled’.

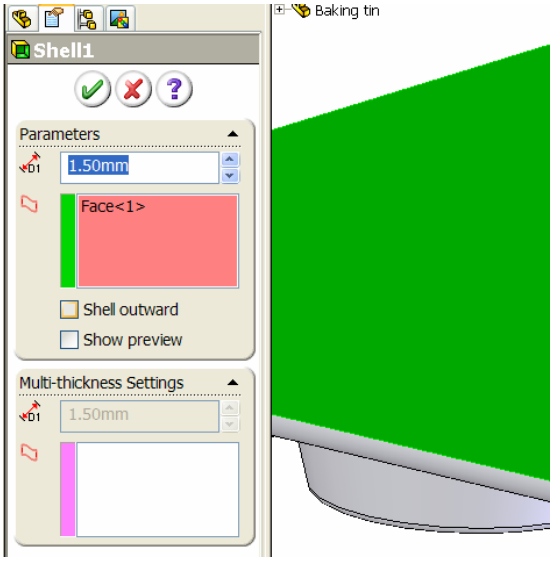

Fillet top surface

Apply a 2mm fillet to the top surface of the tray.

Rename the feature as ‘Top surface fillet’

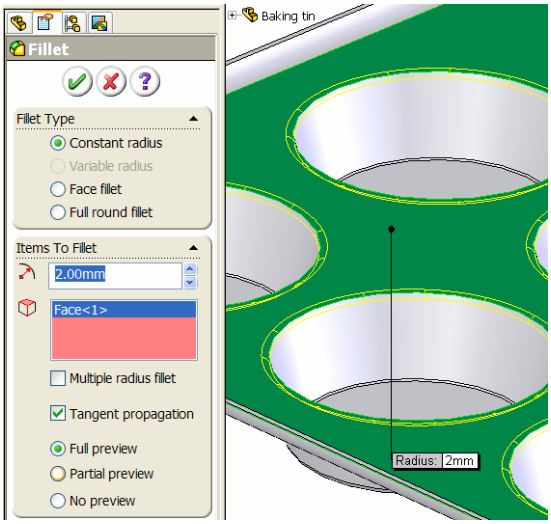

Full round fillet

Apply a full round fillet to the top edge of the baking tray.

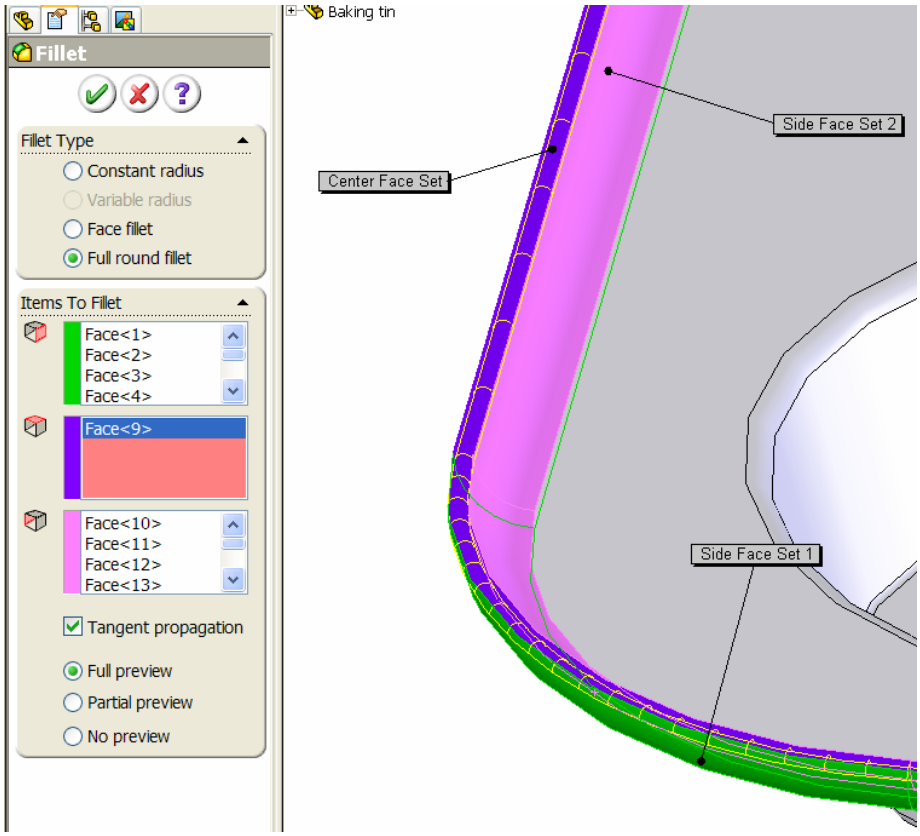

Rename as ‘Full round fillet’.

Edit Material

Apply a **Chrome Stainless Steel** finish using **Edit Material**

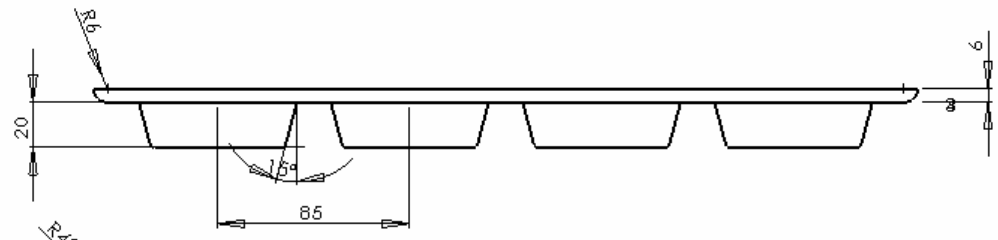

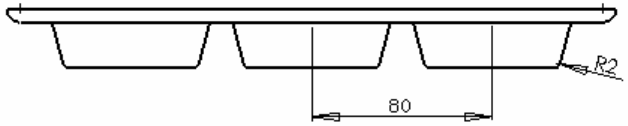

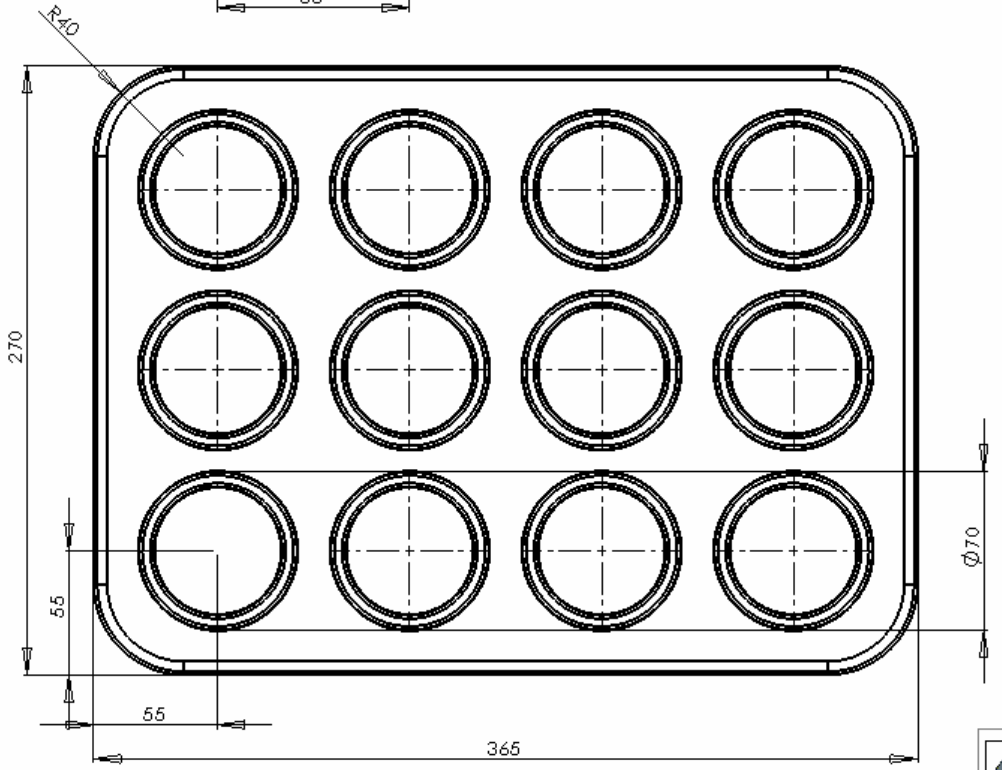

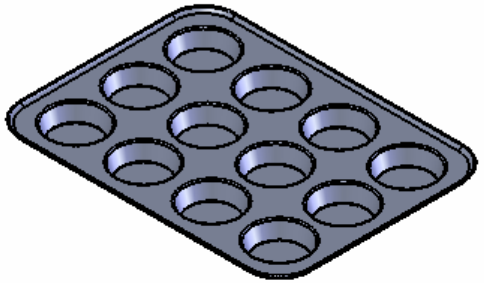

TECHNOLOGY SUBJECTS SUPPORT SERVICE

DESIGN & COMMUNICATION GRAPHICS

TITLE: Baking tray

DRAWN BY: YOUR NAME HERE

SIZE A3

UNLESS OTHERWISE SPECIFIED ALL DIMENSIONS ARE IN mm

SCALE: 1:5

DATE: 16/10/2007

SHEET 1 OF 1

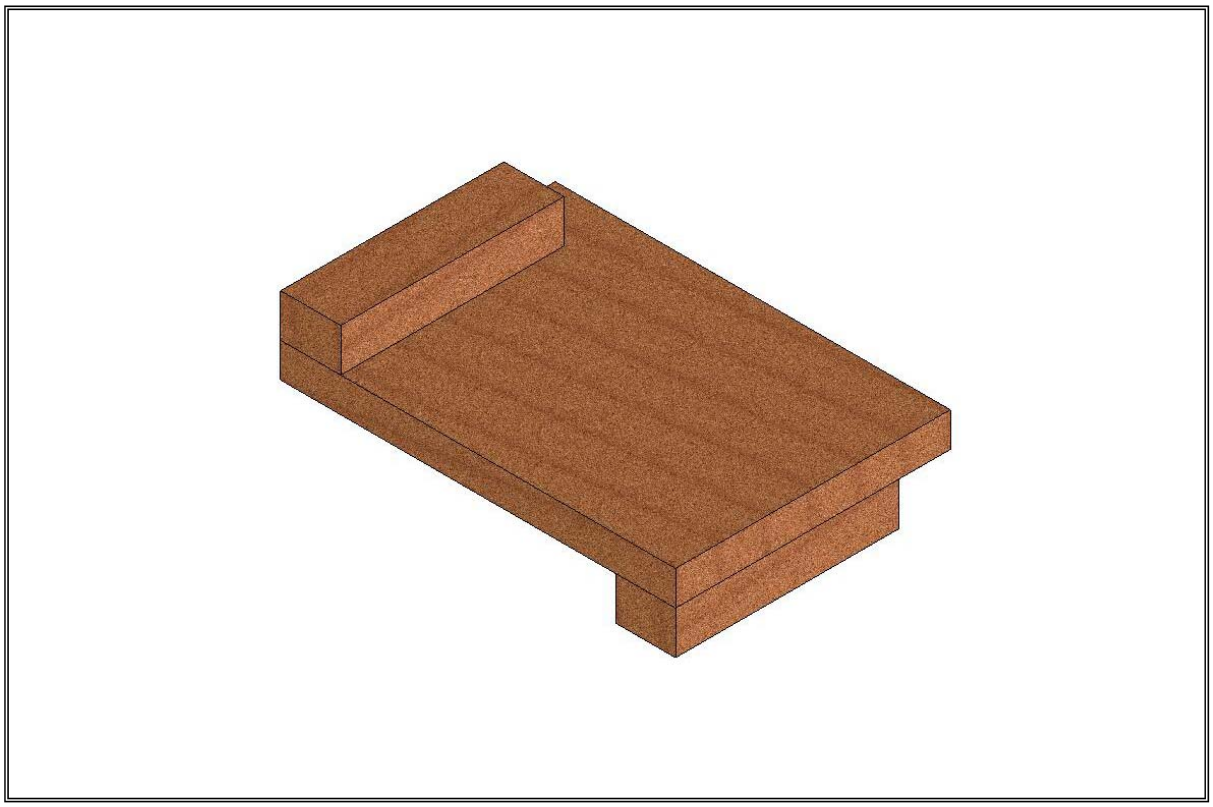

Computer Aided Design – Module 1

Lesson – Bench Hook

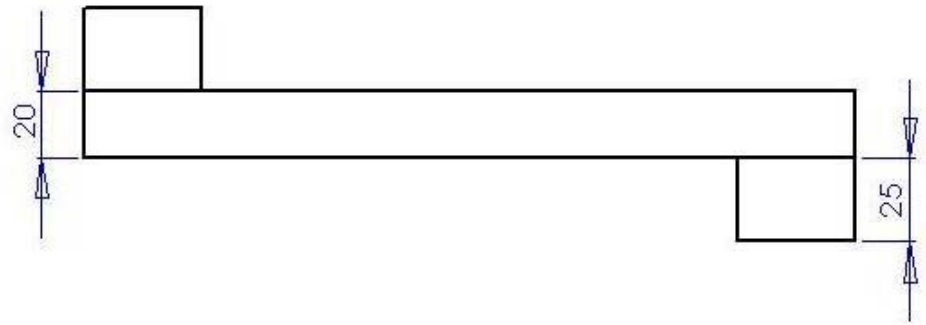

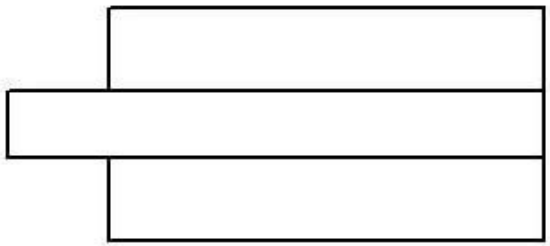

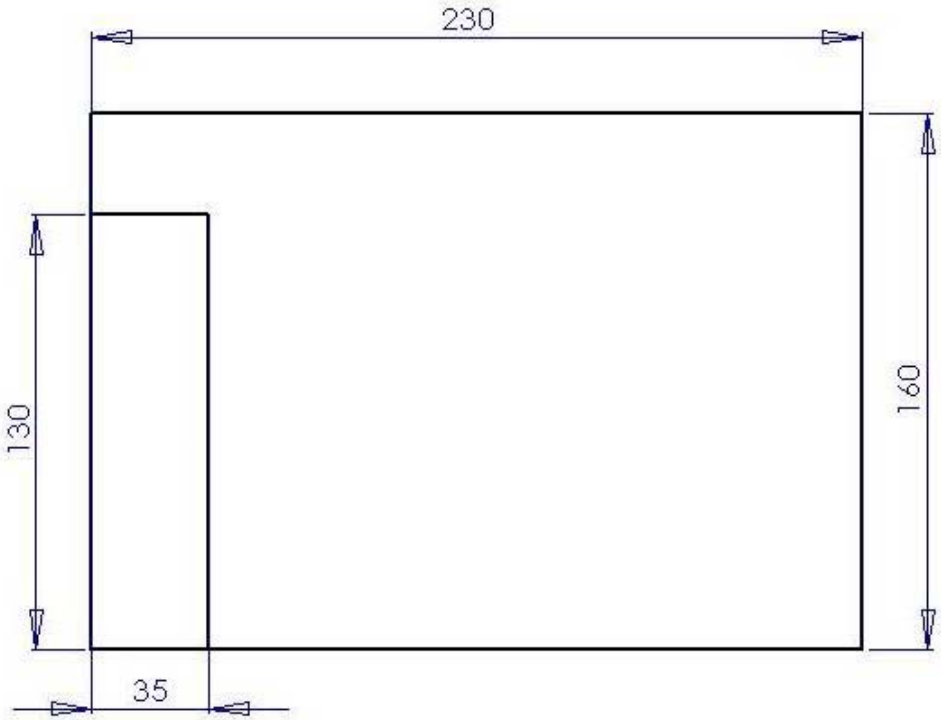

TECHNOLOGY SUBJECTS SUPPORT SERVICE

DESIGN & COMMUNICATION GRAPHICS

TITLE:

Assembled

DRAWN BY: YOUR NAME HERE

SIZE A4

UNLESS OTHERWISE SPECIFIED ALL DIMENSIONS ARE IN mm

SCALE: 1:5

DATE: 16/10/2007

SHEET 1 OF 1

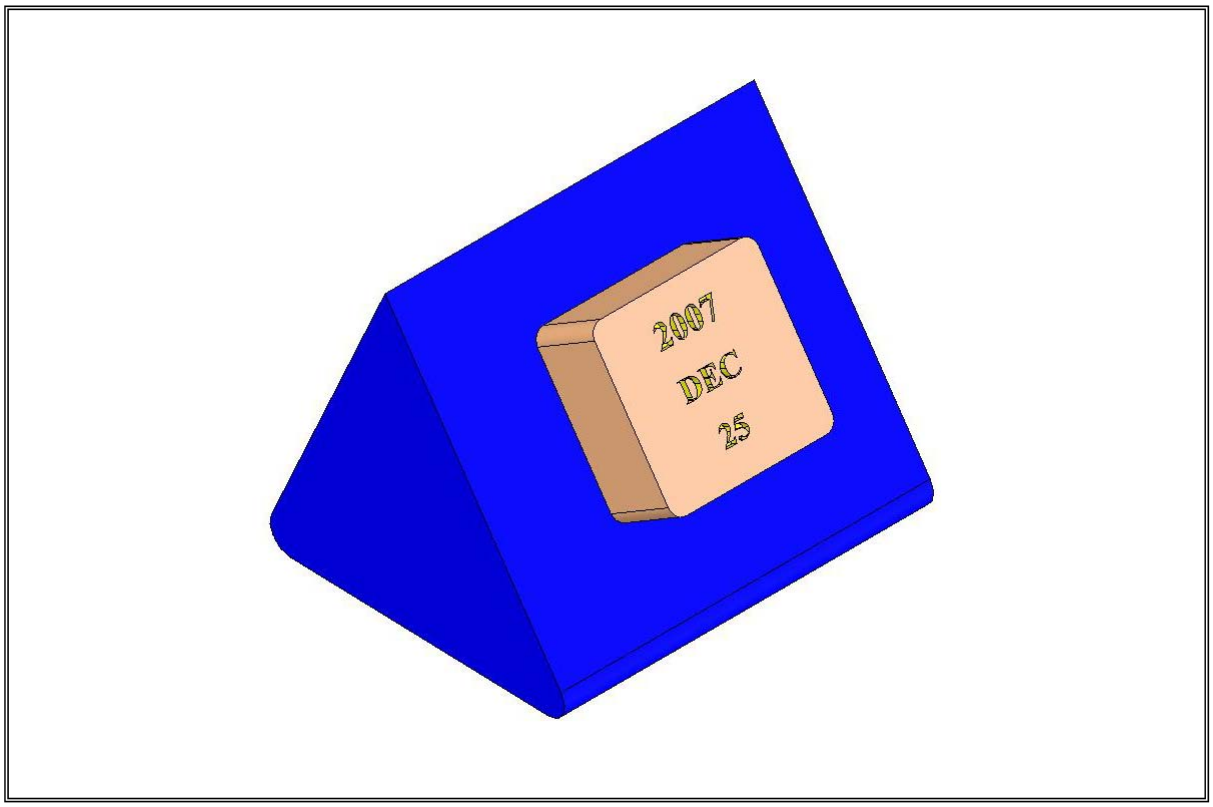

Computer Aided Design – Module 1

Lesson – Desk Calendar

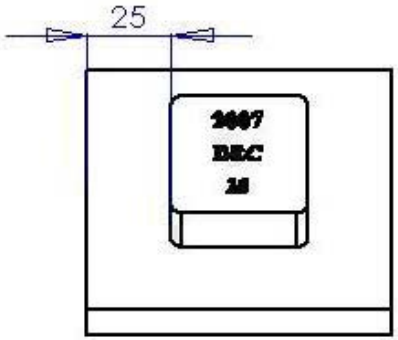

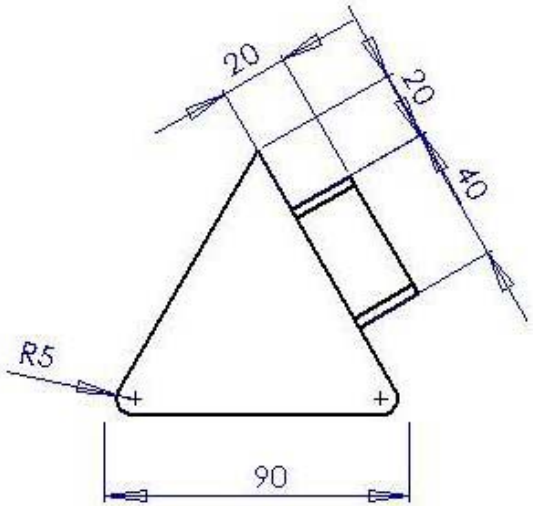

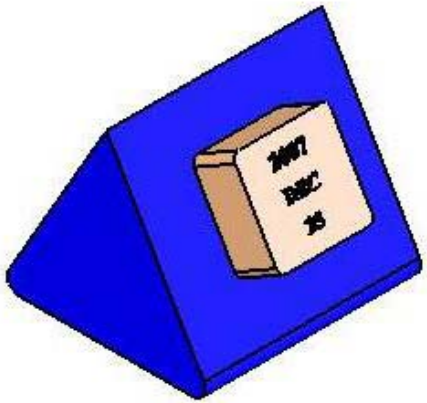

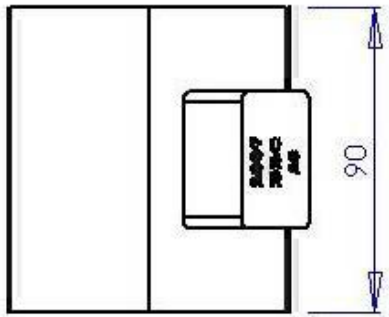

TECHNOLOGY SUBJECTS SUPPORT SERVICE

DESIGN & COMMUNICATION GRAPHICS

TITLE:

Desk Calendar

DRAWN BY: YOUR NAME HERE

SIZE A4

UNLESS OTHERWISE SPECIFIED ALL DIMENSIONS ARE IN mm

SCALE: 1:2

Date: 16/10/2007

SHEET 1 OF 1

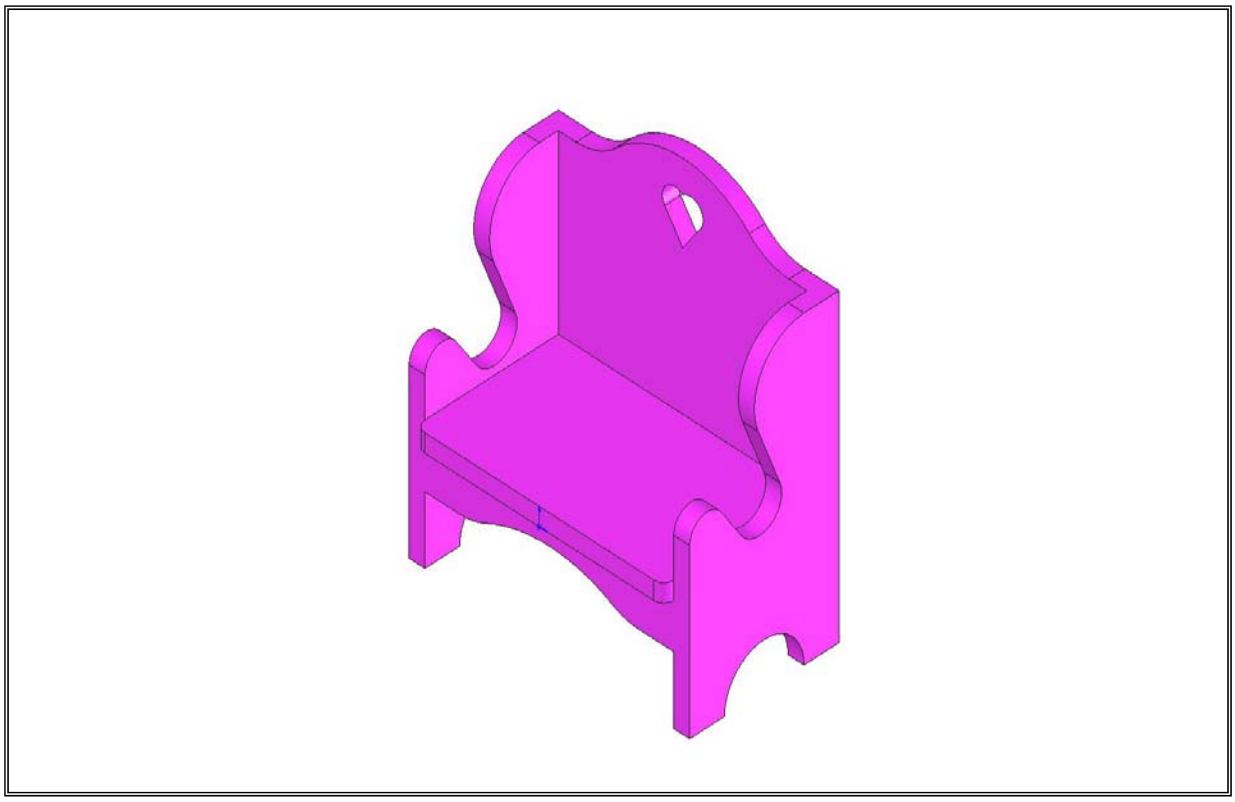

Computer Aided Design – Module 1

Lesson – Doll's Chair

Lesson 1 – Doll's Chair

Commands used: **Sketch Rectangle, Circle, Add Relations, Trim, Smart dimension, ,Extrude Boss/Base, Extruded Cut, Fillet & Edit Material**

Approach to Lesson:

Create sketch for seat Create the sketch on the **Right Plane** using the Rectangle sketch command.

Smart Dimension Fully define the sketch using the given dimensions and confirm sketch.

Extruded Boss/Base Extrude the sketch using **Extruded Boss/Base**
Select **Mid-Plane** the end condition and a distance of 250mm.

Rename the feature as 'Seat.'

Create sketch for side Select the end face of the seat of the as the plane for this sketch

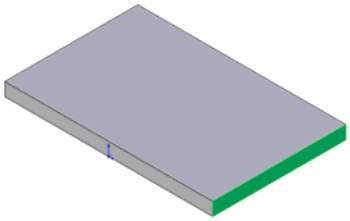

Sketch rectangle, circles and lines as shown.

(Alternatively you can draw the outline of the side using the line command).

Add the appropriate relations as indicated

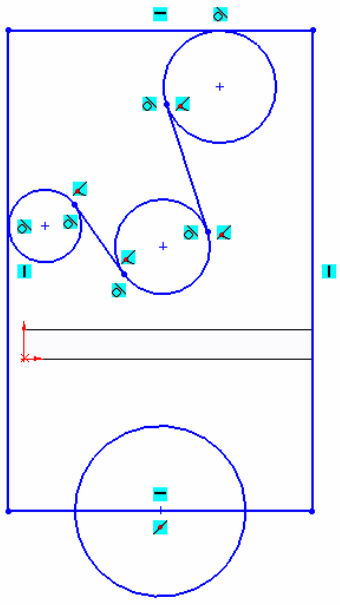

Use the **Trim Entities** command to remove lines and arcs. Use **Smart Dimension** to full define the sketch as shown.

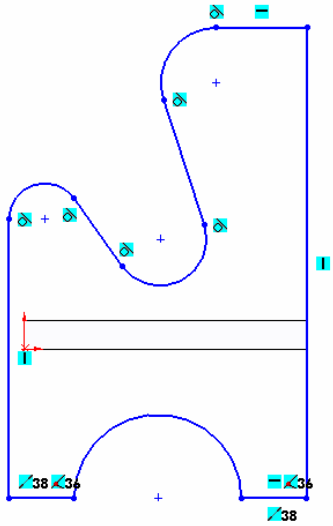

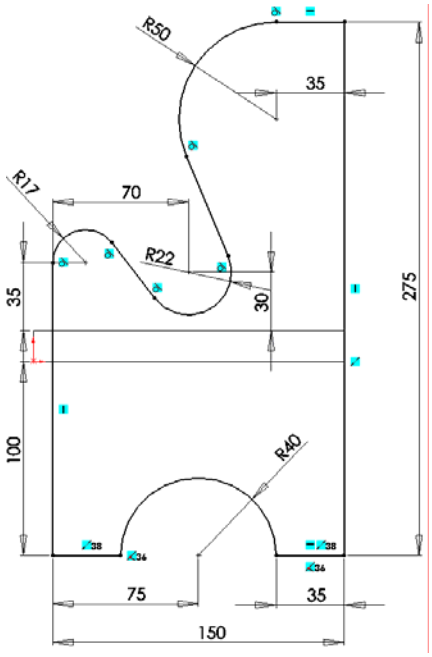

Extruded Boss/Base

Extrude the sketch using **Blind** as the end condition and a distance of 16mm.

Rename the feature as ‘Right side’.

Mirror Feature

Mirror

the right hand side of the chair in the **Right Plane** to create the left side

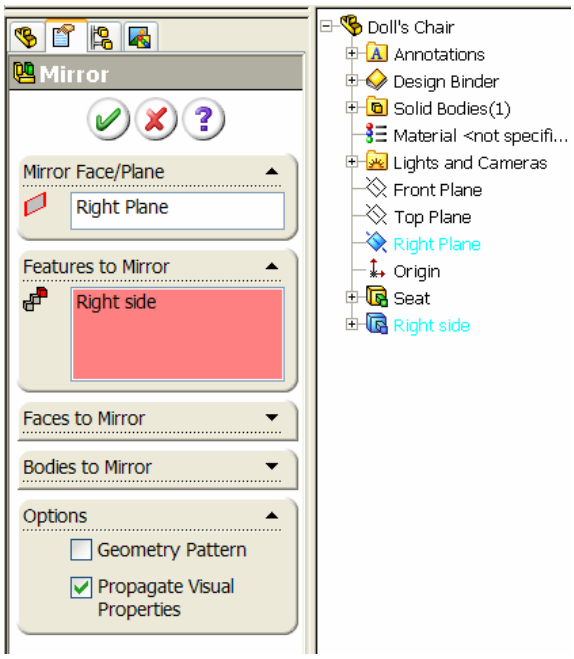

Rename the feature to ‘Right side mirrored’.

Create sketch for back

Select the back surface of the seat/sides as the plane to create the sketch. Use the **Centreline, Rectangle, Circle and Trim** commands to draw the sketch.

Smart Dimension as indicated.

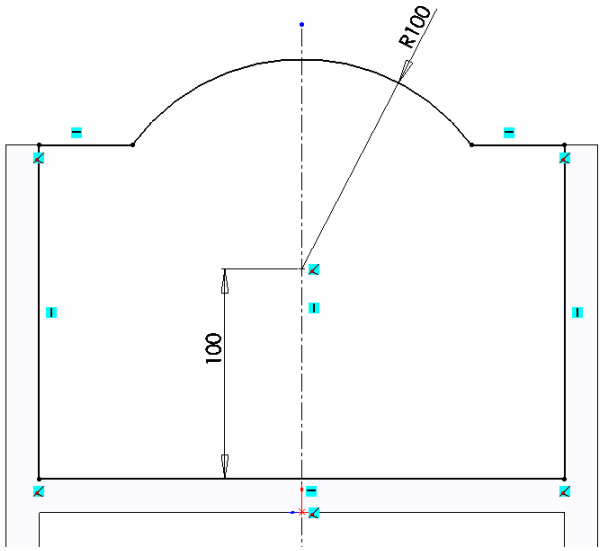

Extruded Boss/Base

Extrude the sketch using **Blind** as the end condition and a distance of 16mm.

Rename the feature as ‘Back’.

Create sketch for Rail

Select the front surface of the either side as the plane to create the sketch.
Use the **Centreline, Rectangle, Circle and Trim** commands to draw the sketch.
Smart Dimension as indicated.

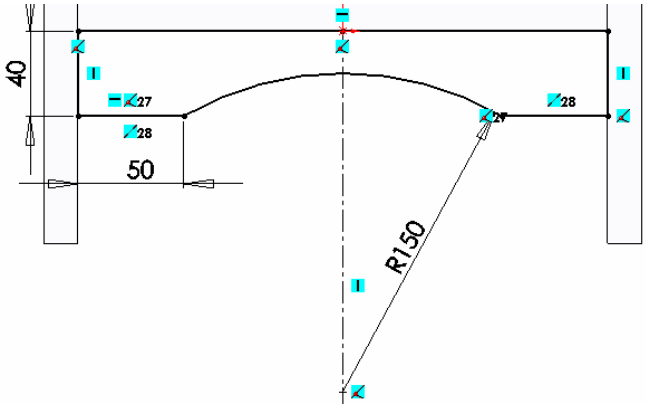

Extruded Boss/Base

Extrude the sketch using **Blind** as the end condition and a distance of 16mm.

Rename the feature as ‘Front Rail’.

Create sketch for ‘Heart’ Shape

Select the front surface of the ‘Back’ as the plane to create the sketch.
Use the **Centreline and Line** commands to draw the sketch the left hand side of the sketch.

Use **Mirror** on the sketch tool to create the right hand side of the sketch

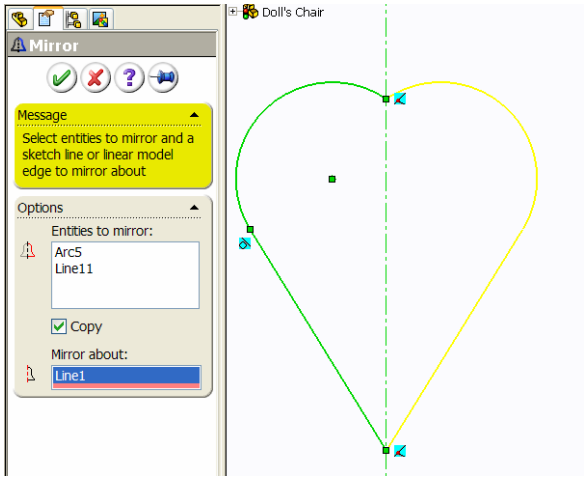

Smart Dimension as indicated

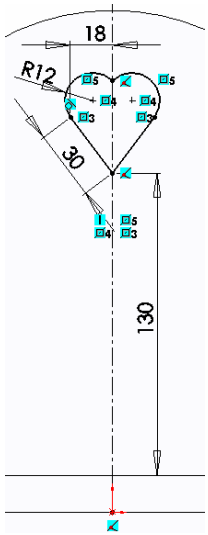

Cut Extrude Cut Extrude using **Through All** as the end condition.

Fillet 1 Using **Fillet,** add a 60mm fillet to the selected edges of the Back and Front Rail.

Fillet 2 Add a 10mm fillet to the front corners of the seat.

Edit Colour Apply a colour to the part from the Color and Optics Property Manager.

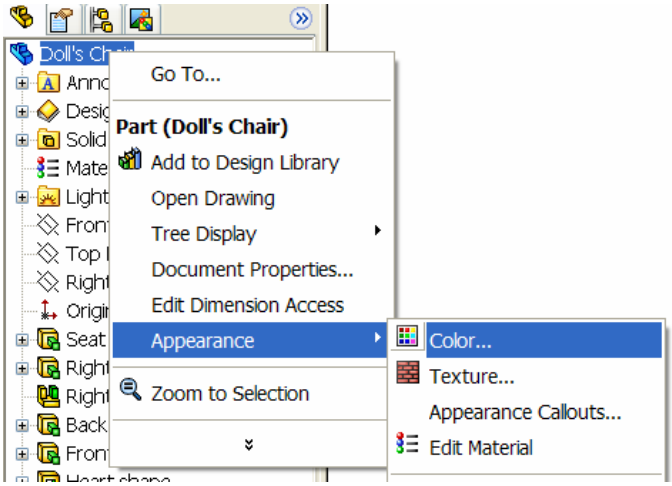

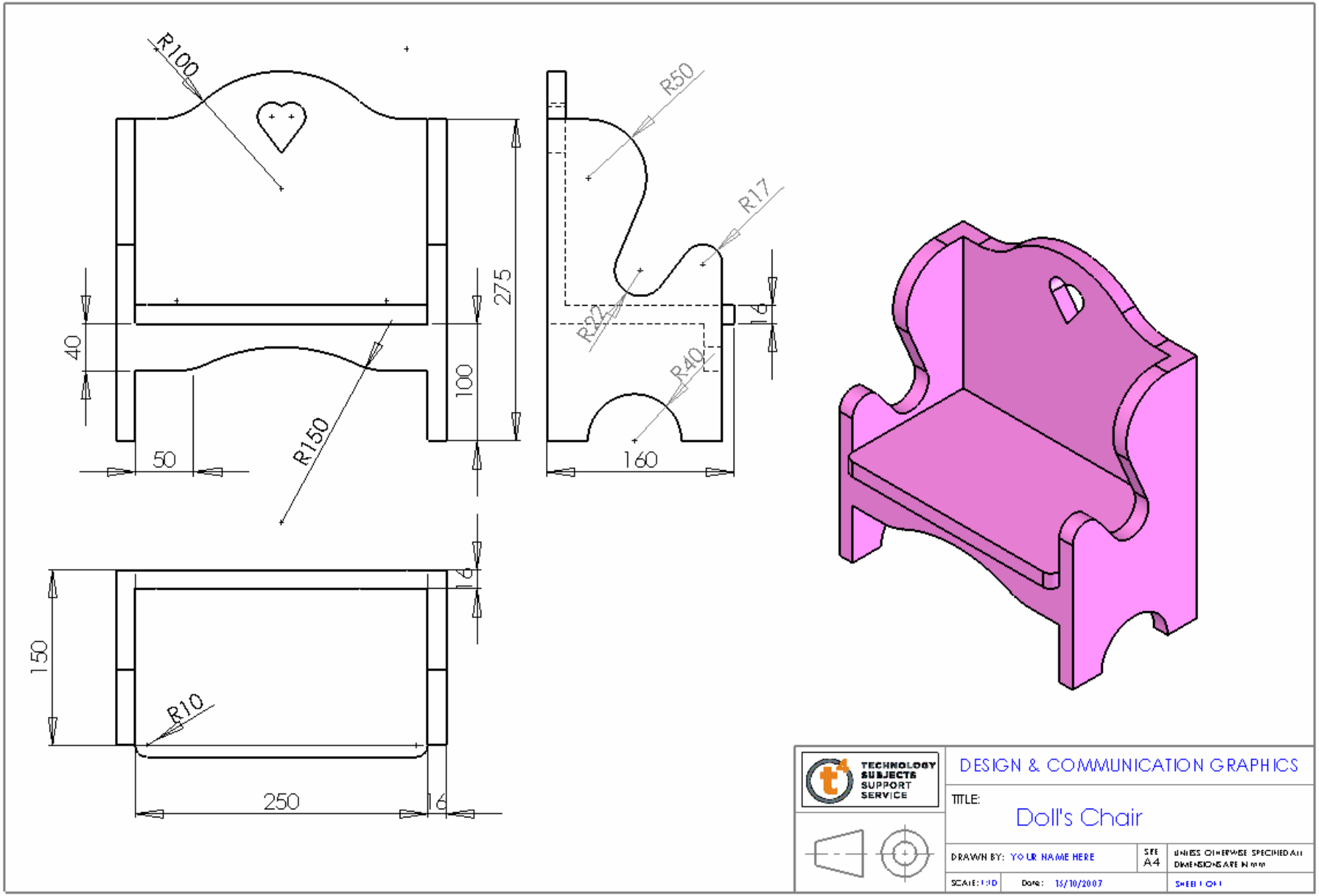
R100
R50
R17
R24
R40
275
100
40
50
R150
160
16
16
150
R10
250
16
TECHNOLOGY SUBJECTS SUPPORT SERVICE
DESIGN & COMMUNICATION GRAPHICS
TITLE:
Doll's Chair
DRAWN BY: YOUR NAME HERE
SIZE A4
UNLESS OTHERWISE SPECIFIED ALL DIMENSIONS ARE IN mm
SCALE: 1:10
Date: 15/10/2007
SHEET 1 OF 1

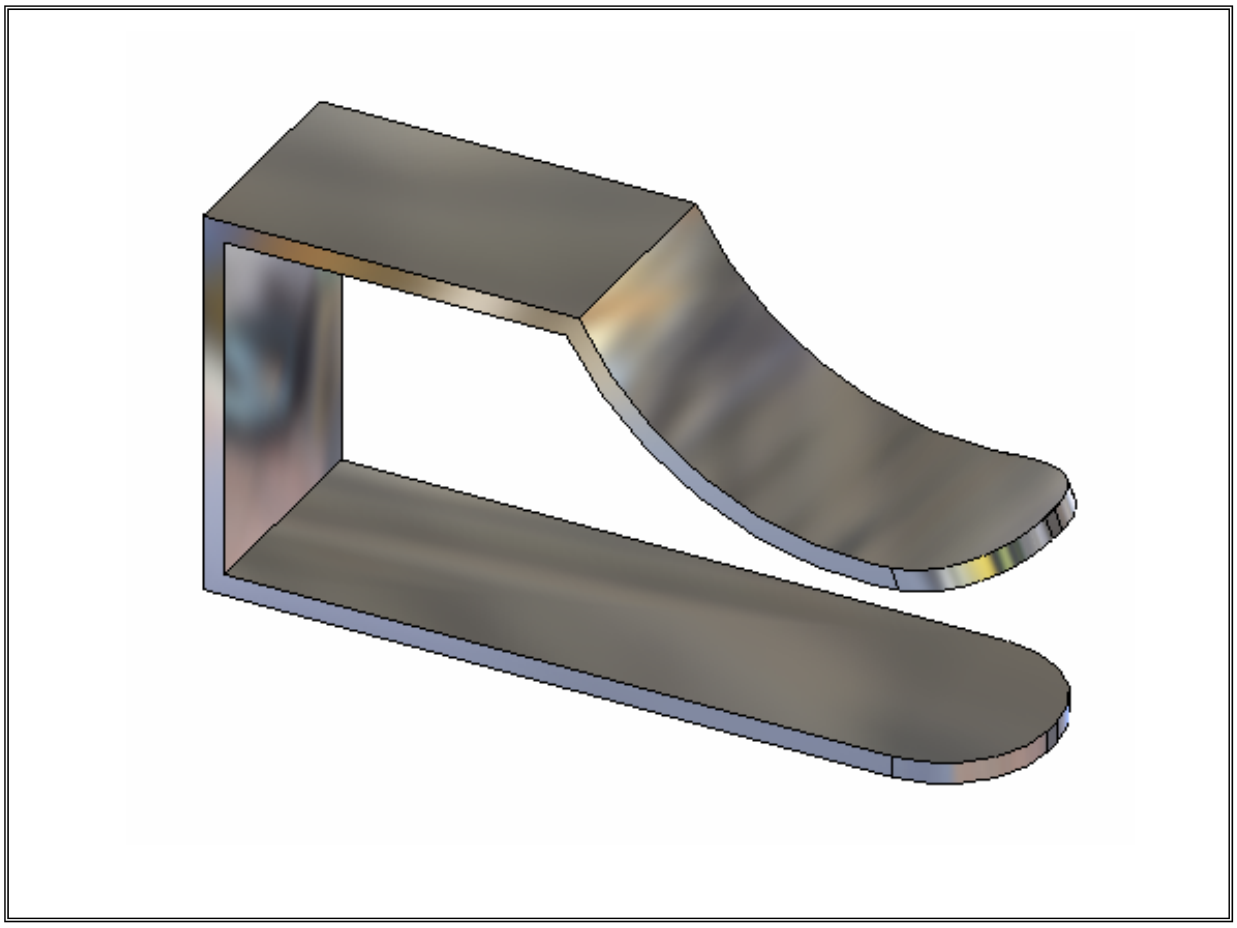

Computer Aided Design – Module 1

Lesson – Drawing Clip

Lesson 1 – Drawing Clip

Commands used: **Line, 3 Point Arc, Add Relations, Smart dimension, Offset Entities, Extrude Boss/Base (Mid Plane End Condition), Fillet & Edit Material**

Approach:

Create Sketch

Create the **sketch** shown on the **Front Plane.**

Automatic Relations

Use **3 Point Arc** to generate the curve
Ensure all **Automatic Relations** are included.

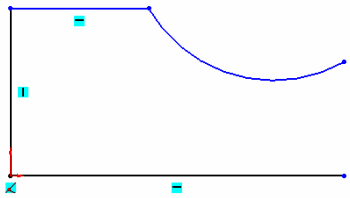

Added Relations

Add a **Vertical Relation** between the arc endpoint and the end of the horizontal line.

Smart Dimension

Fully Define the sketch using only the given dimensions

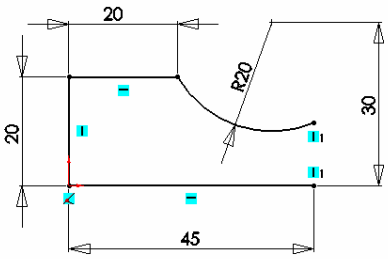

Offset Entities

Using **Offset Entities** create a 1.25mm offset to the outside. Close the ends using the **Line** command.

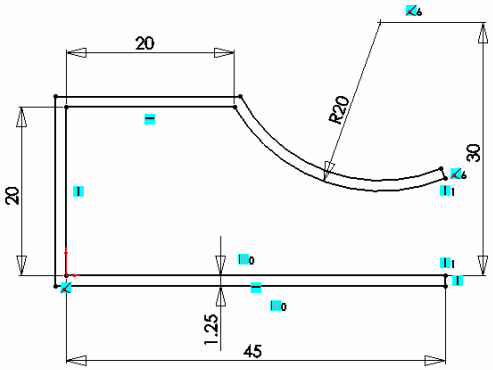

Extruded Boss/Base

Extrude the sketch using **Extruded Boss/Base** and a **Mid-Plane End Condition.**

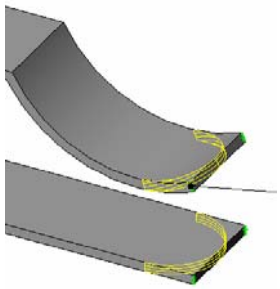

Fillet

Using **Fillet,** add a 6.5mm fillet to the selected edges.

Edit Material

Apply a **Chrome Stainless Steel** finish using **Edit Material.** (Use **RealView** in **Advanced Graphics**)

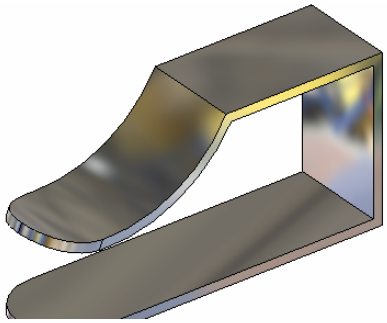

Discussion Points

Inclusion of **Automatic Relations.**
Added Relations as opposed to dimensioning
Influence of appropriate **End Conditions**
Explain the emboldened terms

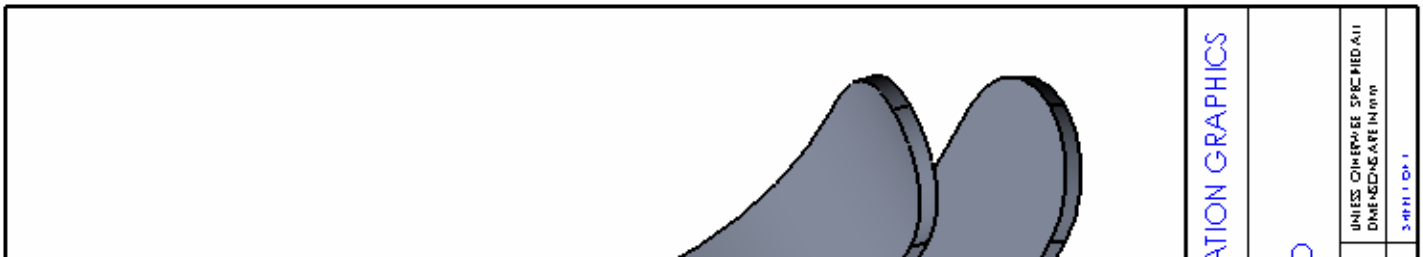

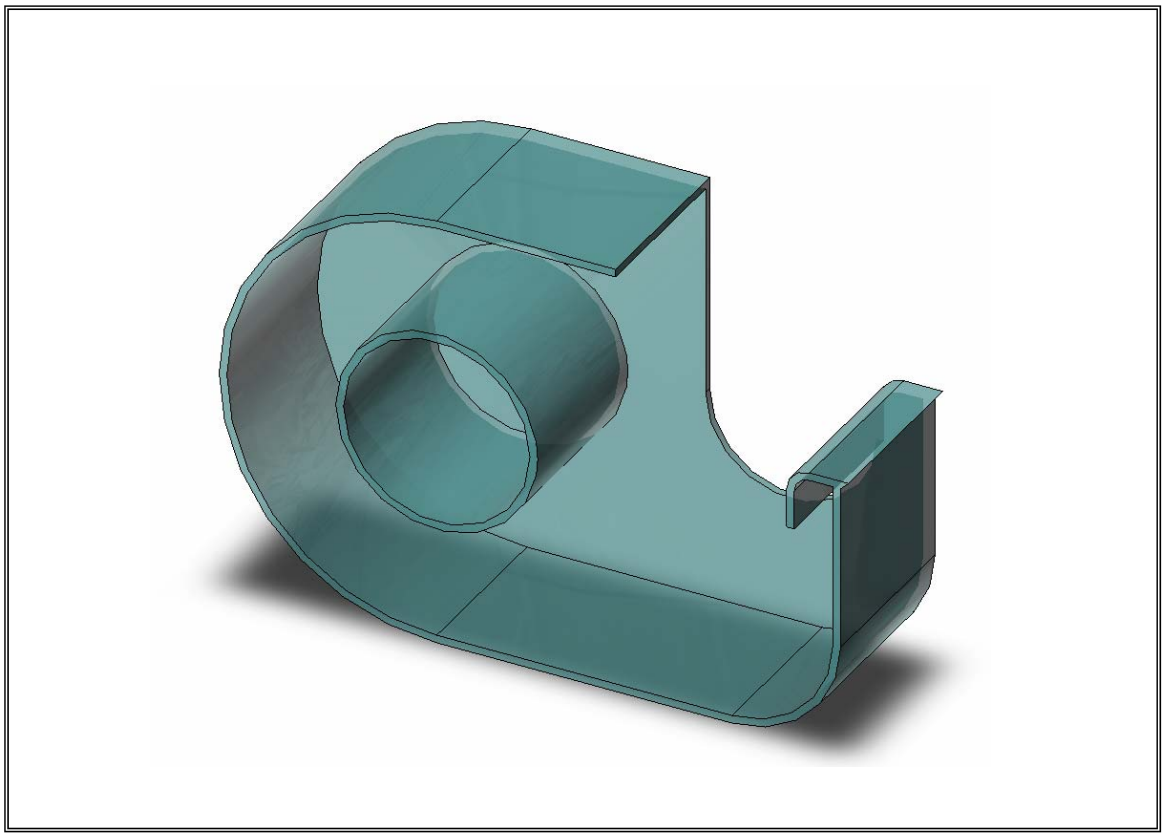

Computer Aided Design – Module 2

Lesson – Sellotape Holder

Lesson 2 – Sellotape Holder

New Commands used: **Circle, Tangent Arc, Trim Entities, Extrude Boss/Base (Up to Surface), Shell & Edit Color.**

Approach:

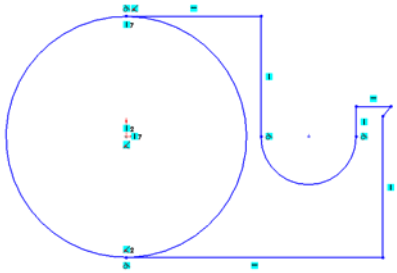

Create Sketch — Create the sketch shown on the front plane
All relations are **Automatic Relations**
(Note the **Origin** position)

Add Relation — Add a **Horizontal Relation** between the centre of the **Circle** and the centre of the **Tangent Arc.**

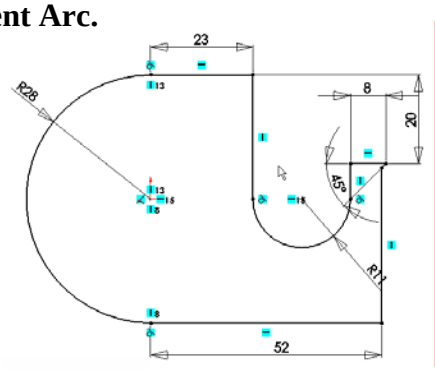

Trim Entities — Remove the unwanted portion of the circle using **Trim Entities.**

Smart Dimension — **Fully Define** the sketch using <u>only</u> the dimensions displayed.

Extruded Boss/Base — Extrude the sketch using a **Blind End Condition** and a **depth** of 23mm

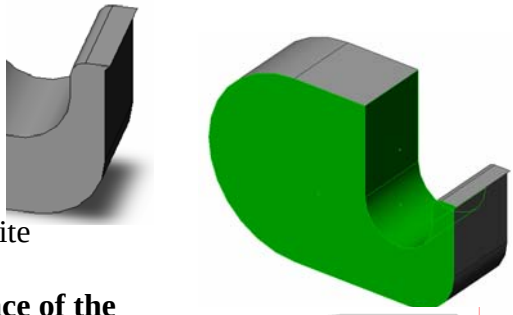

Fillet — Apply a **Fillet** to the corners shown.

Shell — **Shell** the part to a 1mm **wall thickness.**
Remove the **selected faces** shown opposite

Sketch on a face — **Create the sketch shown on the new face of the shelled part.** Ensure that the centre of the circle is **coincident** with the origin.
Use **Offset** to generate the inner circle.

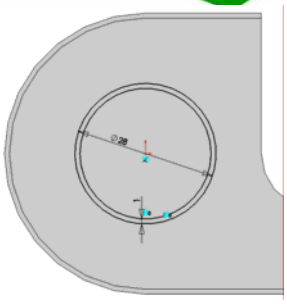

Extruded Boss/Base — Extrude the sketch using an **Up To Surface End Condition.** (Use the 1mm front face as surface)

Edit Material — Apply a **Perspex Acrylic Sheet** finish using **Edit Material.**

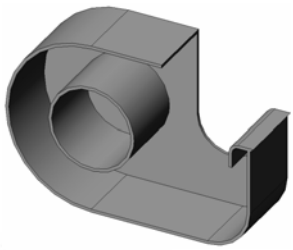

Edit Colour — Choose a suitable colour from the **Edit Color** palette

Discussion Points

Positioning of the **Origin**
Inclusion of **Automatic Relations.**
Sketching on a **Face**
Why **Up To Surface** End Condition?
Explain the emboldened terms

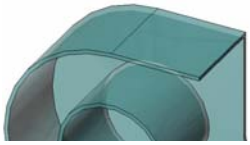

SOLIDWORKS

TEACHER TRAINING

MANUAL

Created By

Solid Solutions Ireland

Table of Contents

	Page
1.0 Introduction……	3
2.0 What is SolidWorks?.....	14
3.0 Create a Part…….	17
4.0 Create a drawing……	32
5.0 Create an Assembly……..	38
6.0 Exercises……	44

1.0 Introduction

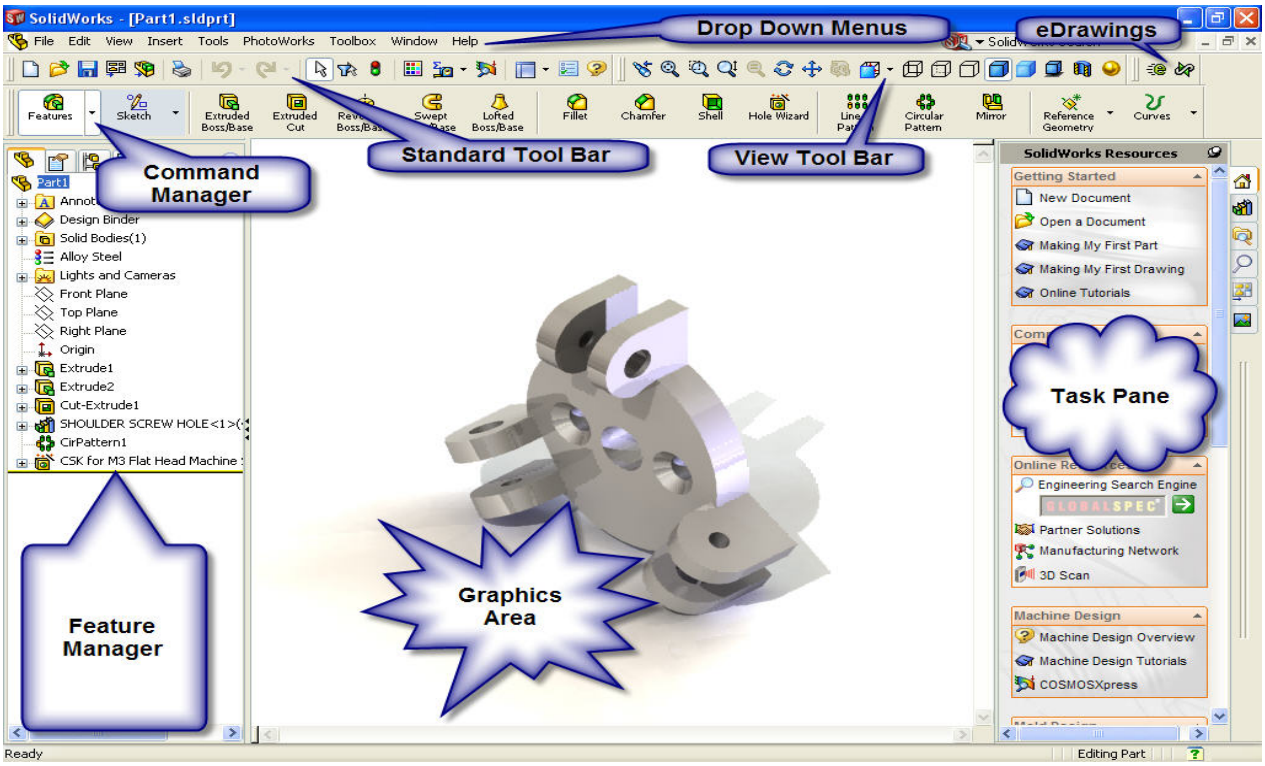

1.0 Introduction

As your first step to mastering the use of solid works we are going to review the user interface or the SolidWorks window (See Fig 1.0 page 2). To begin, using the left mouse button double click on the SolidWorks icon on the PC desktop screen to open the program. If there is no icon visible the program can be started through Start - All Programs – SolidWorks 2006. You can access commands in SolidWorks using menus, toolbars and the mouse. The SolidWorks interface is dynamic in that different toolbars and menus appear depending on the active document type.

1.1 Document Windows

The format of the SolidWorks window reflects that of windows itself. The same is true for any SolidWorks document. Once opened a document appears split into two panels. The right is the graphics window, where your model or drawing appears. You can create and manipulate the document in the graphics window. The left panel contains the following SolidWorks document windows:

FeatureManager design tree: Similar to the windows explorer tree it lists the structure of the part, assembly or drawing.

PropertyManager: Appears in the left panel when you select many of the SolidWorks commands such as sketches, fillet features and so on. The PropertyManager displays selection icons to enter relevant command options and boxes/fields to enable the user to enter relevant design and data parameters.

ConfigurationManager: Appears in place of the FeatureManager design tree. Helps create, select and view multiple configurations (variations of parts and assemblies in a single document).

1.2 The SolidWorks window

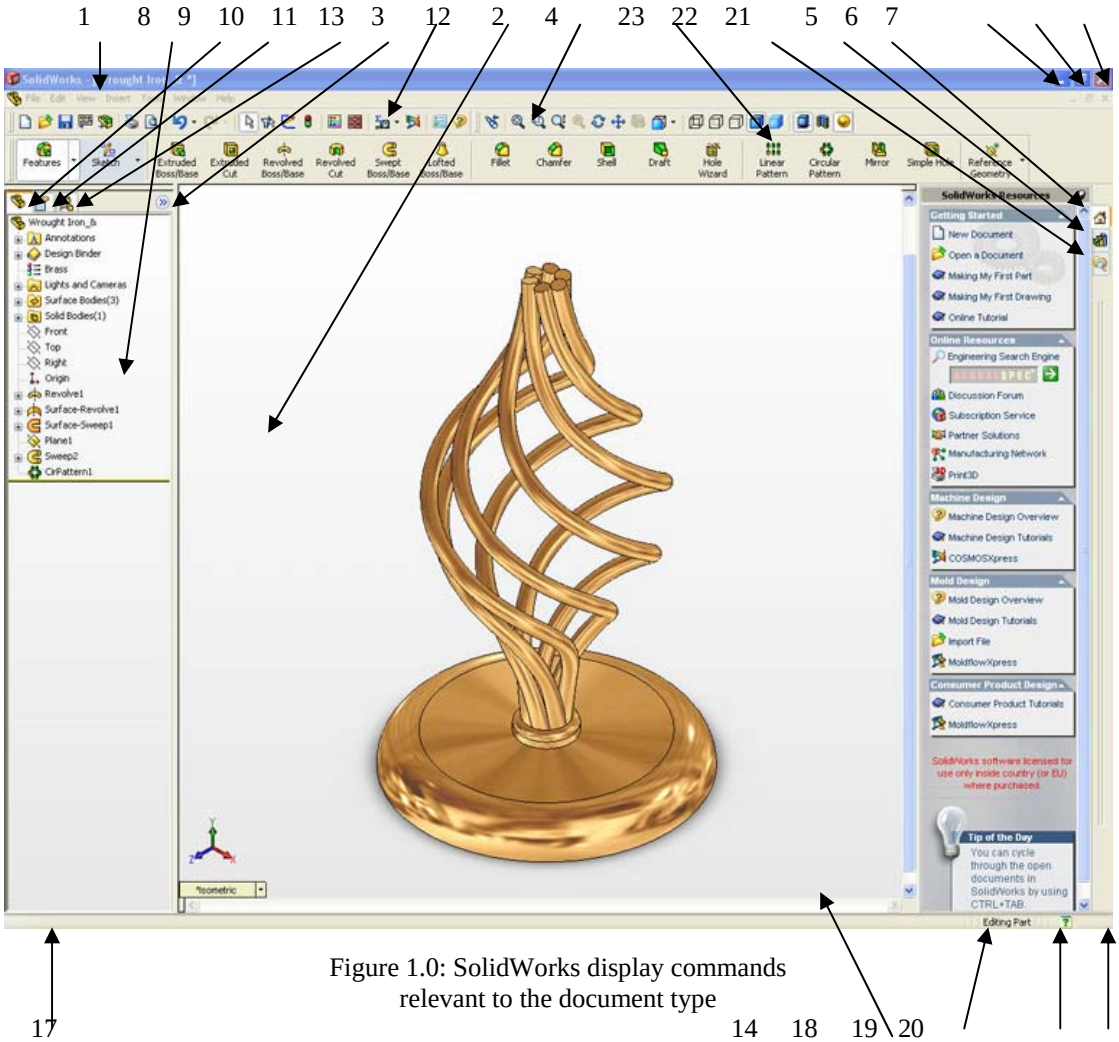

Figure 1.0: SolidWorks display commands relevant to the document type

The Main elements of the SolidWorks user interface are as follows (see Figure 1.0 for the corresponding item numbers):

1. Title bar: Displays the name of the active document and active document window with a blue (default color) title bar. Inactive document windows are shown with a grey title bar. If you haven't saved any changes to a document, you see a * after the document name.

2. Main Menu: A set of drop down menus (File, Edit, View, and so on) across the top of the user interface. The menu bar contents are task dependent based on the active document type. SolidWorks toolbars display these functions whereas the menu bar contains the complete set.

3. Standard toolbar: Found just beneath the main menu this toolbar is consists of a set of the most commonly used command buttons.

4. View toolbar: Features a series of commonly used command buttons that allow you to zoom, rotate and view the part in different orientations.
5. Minimize window: Shrinks the document window.

6. Maximize window: Enlarges the viewing window to full-size.

7. Close window: Closes solid works. If you have made any changes to you documents, SolidWorks prompts you to save the document.

8. Command Manager: A dynamic toolbar that lists the command buttons for the type of document you are working on.

9. FeatureManager design tree tab: Displays the FeatureManager design tree.

10. PropertyManager: Appears in the left panel when you select many of the SolidWorks commands such as sketches, fillet features and so on. The PropertyManager displays selection icons to enter relevant command options and boxes/fields to enable the user to enter relevant design and data parameters.

11. ConfigurationManager tab: Appears in place of the FeatureManager design tree. Helps create, select and view multiple configurations (variations of parts and assemblies in a single document).

12. FeatureManager design tree: Similar to the windows explorer tree it lists the structure of the part, assembly or drawing.

13. Show display pane: Expands or collapses the display pane.

14. Graphics area: Displays the part assembly or drawing.

15. Pointer: Indicates the position of the mouse and lets you select items within the user interface (not shown on Fig 1.0)

16. Tool tip: A pop up informational message about a feature or function. It appears when you hover the pointer over an object. It disappears after a few seconds (not shown on Fig 1.0).

17. Status bar: Gives more complex explanation of the selected function.

18. Status bar: Indicates whether it is a drawing, part or assembly that you are editing.

19. Quick tips help: Indicates with a question mark button whether Quick Tips is on or off. Click the icon to toggle

20. Resize window: Enables resizing (by clicking and dragging) the window if it isn't already maximized.

21. SolidWorks resources: Click to open the SolidWorks Resources tab, which contains links to resources, tutorials, tips of the day and also command buttons to open or create SolidWorks documents.
22. Design Library: Click to open the design library. Inside you see the Design Library, Toolbox and 3D Content Central each which contain many standard design elements you can drag and drop into your design.

23. File Explorer: Duplicates Windows Explorer in your computer. Lists recently opened documents and currently opened documents. You can drag documents from here into the graphics area.

1.2.1 The FeatureManager design tree

On the left side of the SolidWorks document window the FeatureManager design tree provides Windows Explorer-type selection and editing access to all the entities in your active document. The type of entities the design tree is populated with varies depending on the active document type from features and sketches for part documents to drawing views for a drawing and parts/subassemblies in an assembly.

Key advantages offered by the FeatureManager design tree:

- **Shows the order in which the elements were created with the oldest at the top**
- **Links to the graphics pane**
  Allows selection/highlighting of an object by clicking/hovering the pointer over the appropriate element in either the design tree or graphics area.
- **Displays graphical feedback that displays feature or component characteristics:**
  For Example if the component is suppressed, it appears in grey.
- **Allows you to see the contents of the folders in the tree:**
  You can click + or – to maximize or minimize the folder.
- **Gives you access to quick functions when you right click:**
  The functions displayed will depend on the object and document type.

Fig 1.1: The CommandManager

1.2.2 The Command Manager

Located just below the standard tool bar in the top left hand corner of the document window, is the CommandManager, a smart toolbar that displays the menus you need for the task at hand. The CommandManager is divided into two areas: the control area made up a selection of buttons any of which selected displays a toolbar in the toolbar area (directly to the right of the control area as shown above). For example, if you select the Features button, the Feature commands display in the toolbar area (Extruded base/boss, extruded cut and so on).
The CommandManager makes efficient use of the space onscreen by embedding a number of toolbars in just one. As a result this minimizes the number of menu picks, mouse movements and overall allows the user to work faster and more efficiently.

1.3 View and Orientation

A set of predefined views can be selected through the Standard view toolbar, a flyout (similar to a drop down Menu) tool bar that is embedded in the View toolbar. If you click the Standard View button in the View toolbar, you get a pull-down menu of several commands that represent standard engineering views. This enables the user to select views such as Side, Front, Top, Right and Bottom as well as perspectives: Isometric, Trimetric and Dimetric which vary in viewing.

1.3.1 Orientation

The orientation section of the View toolbar offers several tools to enable the user to manually manipulate the orientation of a model. These manipulation tools include the following:

Zoom to Fit: Zooms in or out so the entire model is visible.

Zoom to Area: Zooms in on a portion of the view that you select by dragging a bounding box. The centre of the box is marked with plus (+) sign.

Zoom In/Out: Zooms in as you press and hold the left mouse button and drag the mouse up. Zooms out as you drag the mouse down.

Zoom to Selection: Zooms to the size of a selected entity.

Rotate View: Rotates the view as you press and hold the left mouse button and drag the mouse around the screen.

Roll View: Rotates the view about an axis normal to the screen as you press and hold the left mouse button and drag the mouse around the screen.

Pan View: Scrolls the view so the model moves as you drag the mouse.

1.3.2 Display Modes

The third section of the View toolbar offers the following display modes for model and drawing view in drawing documents. These tools include the following:

Shaded

Shaded with Edges

Hidden Lines Removed

Hidden Lines Visible

Wireframe (Displays all edges of the model)

Section View

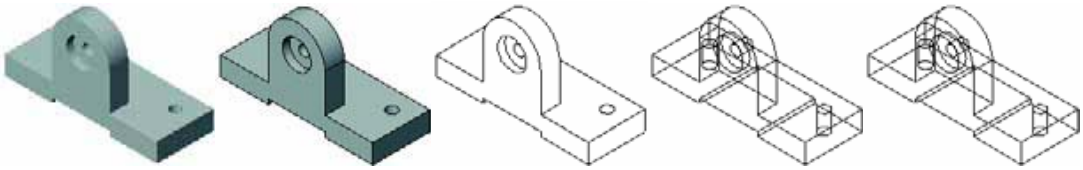

Fig 1.2: Display Modes

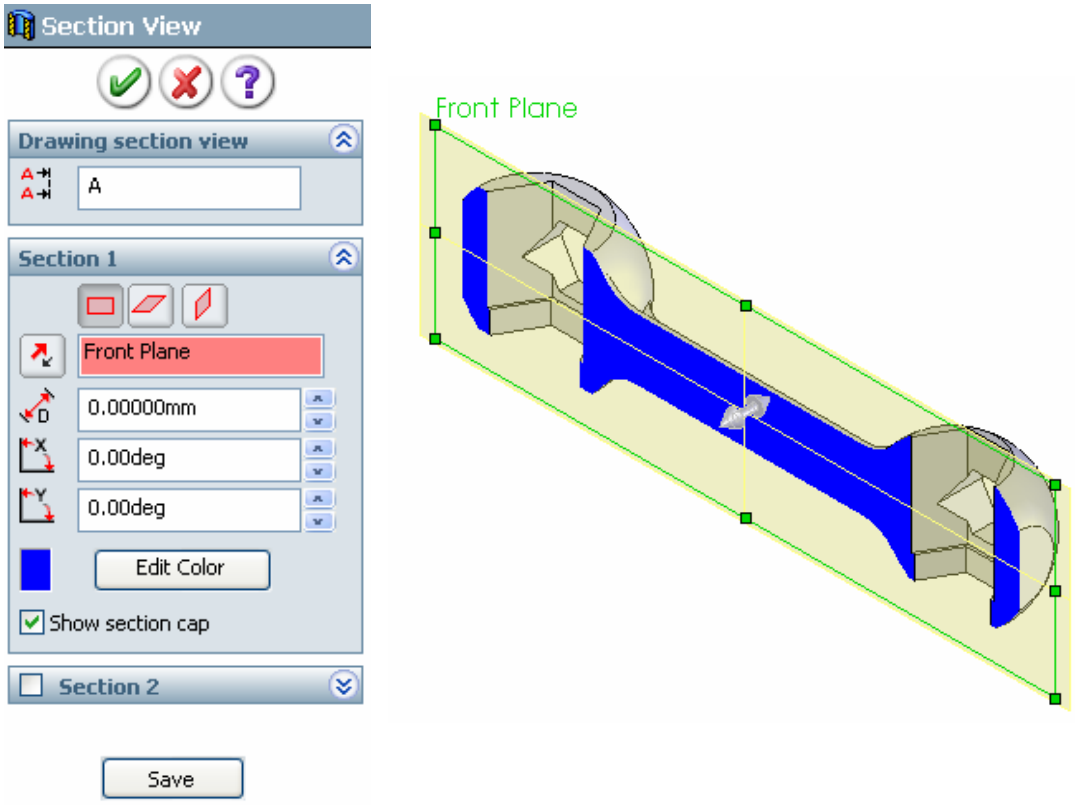

Fig 1.3: Section View and PropertyManager

1.4 Control

1.4.1 Mouse buttons

SolidWorks uses three mouse buttons to access features, select objects and perform tasks:

Left: Selects menu items, entities in the graphics area, and objects in the FeatureManager design tree.

To select an entity click on the entity in the graphics window or in the feature manager design tree. Selected objects become highlighted in both the graphics area and FeatureManager design tree. **To select multiple entities** hold down the Ctrl button while continuing to click on the objects to be selected. **To select a group** of objects hold down the mouse button and drag a window around the objects. **To deselect** all objects click anywhere in the document window outside the part or assembly.

Right: Displays context sensitive options and shortcut menus.

Middle:

Rotate: Hold down button and move mouse. To rotate about a vertex edge or axis (other than the origin) click the middle mouse button on the geometry then hold and move the mouse.

Pan: Hold Ctrl button while holding down button and move the mouse

Zoom: Position cursor over the chosen position in the graphics window and hold shift and mouse button or if available spin roller button toward you to zoom out and reverse to zoom in.

1.4.2 Keyboard Shortcuts

Listed below are the predefined keyboard shortcuts options:
Arrow Keys . . . . . Rotate the view
Shift+Arrow Keys . . . . . Rotate the view in 90° increments
Alt+Left or Right Arrow Keys .Rotate about normal to the screen
Ctrl+Arrow Keys . . . . . Move the view
Shift+z . . . . . Zoom In
z. . . . . Zoom Out
f . . . . . Zoom to Fit
Ctrl+1 . . . . . Front Orientation
Ctrl+2 . . . . . Back Orientation
Ctrl+3 . . . . . Left Orientation
Ctrl+4 . . . . . Right Orientation
Ctrl+5 . . . . . Top Orientation
Ctrl+6 . . . . . Bottom Orientation
Ctrl+7 . . . . . Isometric Orientation
Ctrl+8 . . . . . View Normal To
Spacebar . . . . . View Orientation dialog
Ctrl . . . . . Hold and select multiple items with mouse button
Ctrl+c . . . . . Copy selected entity/item
Ctrl+z . . . . . Undo
Ctrl+y . . . . . Redo
Ctrl+Tab . . . . . .Switch between documents
Alt+drag . . . . . Select anywhere in a drawing view
Shift+drag . . . . . Maintains distance between drawing views while dragging
Ctrl+R . . . . . .Redraw
Ctrl+B . . . . . .Rebuild

1.5 Customisation

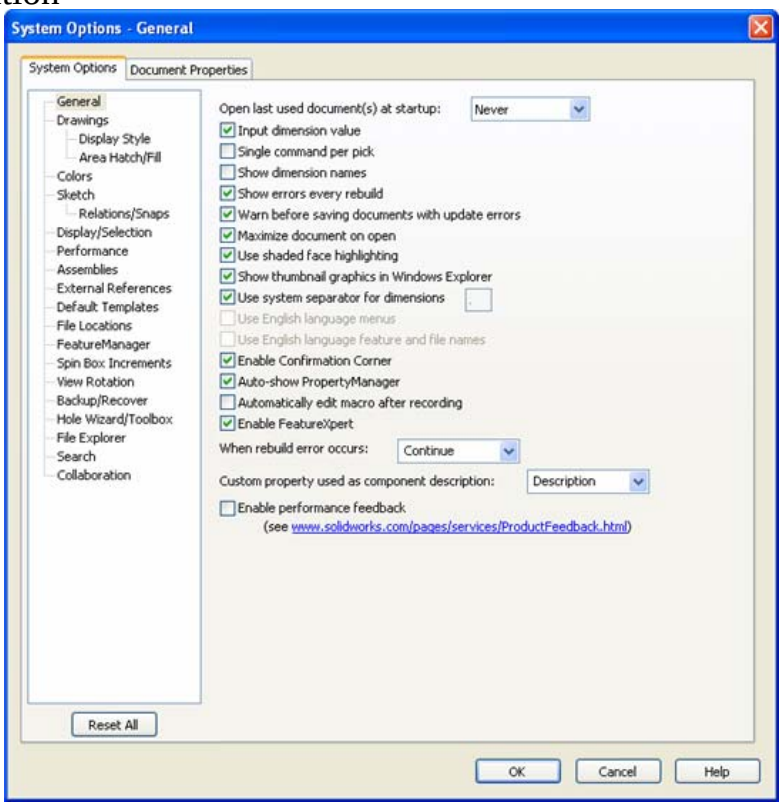

Fig 1.4: Located on the tools menu the options dialogue box allows you to customize the SolidWorks software

1.5.1 Customizing the SolidWorks window

System options

The options grouped under the heading **System Options** are saved on your system and affect every document you open in your SolidWorks session. System settings allow you to control and customize your work environment. For example, you might like working with a coloured graphics window background. Since this is a system setting, parts or assemblies opened on your system would have a coloured graphics window.

Document properties

Certain settings are applied to the individual document. For example, units, drafting standards, and material properties (density) are all document settings. They are saved with the document and do not change, regardless of whose system the document is opened on.

Document templates

Document templates are pre-defined documents that were set up with certain specific settings. For example, you might want two different templates for parts. One with English settings such as ANSI drafting standards and inch units, and one with metric settings such as millimetres units and ISO drafting standards. You can set up as many
different document templates as you need. They can be organized into different folders for easy access when opening new documents. You can create document templates for parts, assemblies, and drawings.

Object

Many times the properties of an individual object can be changed or edited. For example, you can change the default display of a dimension to suppress one or both extension lines, and you can change the colour of a feature

1.5.2 Toolbars

The CommandManager can be customized by right clicking anywhere on the CommandManager and selecting Customize CommandManager. A menu tool bar appears with check boxes next to them. The toolbars with check marks next to them are the ones that already appear in the control area for this type of document. Click to select the check boxes next to the toolbar buttons you want to add to the CommandManager; deselect the ones you want to remove. Click anywhere outside the menu to finish.

Standard Toolbars can be turned on or off using one of three methods:

- Click Tools customize: this displays the dialogue box shown in Fig 1.5 (can only be accessed when in a document. Similar to customizing the CommandManager, on the Toolbars page (default page/tab to open in dialogue box) click the check boxes to select each toolbar you want to display.
- Right click in the SolidWorks window: Pressed icons indicate which tools are currently visible. Click the toolbars you want to see.
- Click view toolbars: this displays the same list of toolbars.

To customise a standard toolbar: (with a document open)

- Open the Customize dialogue box (Click Tools – Customise)
- Select the Commands Tab as shown in Fig 1.0
- Under categories select the toolbar you want to change: Under buttons you see all the buttons that appear in the toolbar that you selected.
    - To place a copy of a command button in another toolbar, in the Customize dialogue box, select click and drag a command button to another toolbar in the SolidWorks window.
    - To remove a button from a toolbar, in the solid works window, click and drag the button to the graphics area
    - To rearrange a command on a toolbar in the SolidWorks window, click and drag the button from the toolbar to another area of the toolbar (or to another toolbar if you wish to place it there).
- Click ok to close the Customize dialogue box.

1.5.3 Customize Keyboard

The keyboards tab accessed in the customize dialogue box shown in Fig 1.5a can be used to view the assigned shortcuts. It can also be used to assign user defined shortcuts.

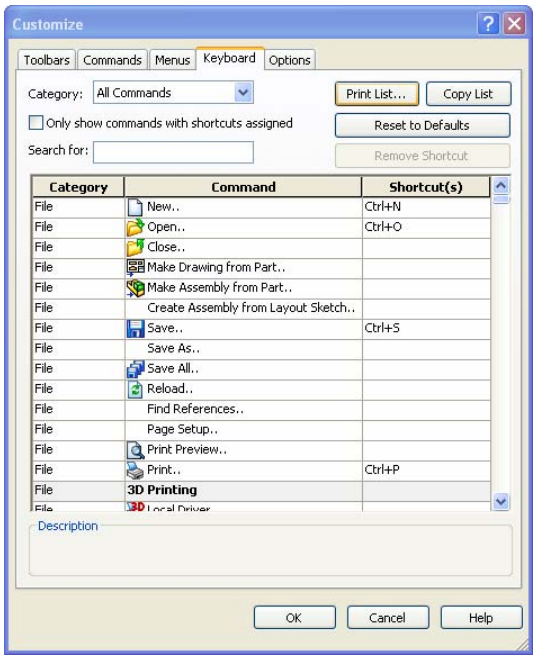

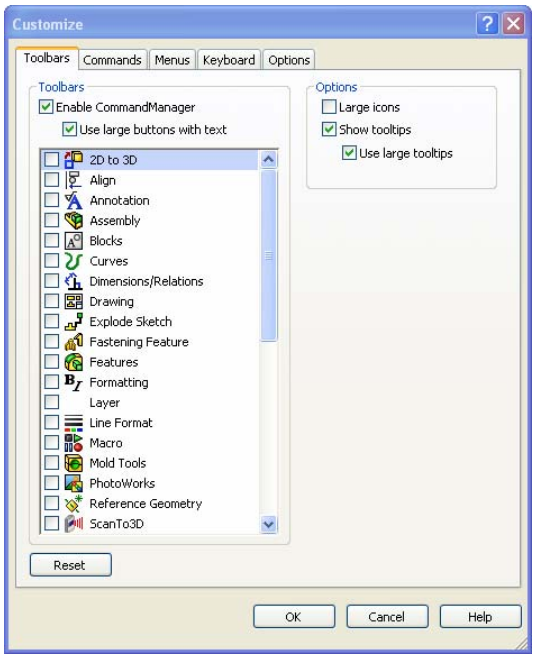

Fig 1.5a and 1.5b: Customize dialogue box located accessed using tools menu enables the user to customize shortcuts and menus

1.6 Exploring the SolidWorks Help Menu

The Help Menu accessed through the main menu contains all the information contained in this manual and much more. Every function and command that can be utilised through the SolidWorks software is detailed in the Help menu. The pull down Help menu includes:

- SolidWorks Help Topics: Contains SolidWorks Online Users Guide which addresses all the functions in the SolidWorks software. The guide includes context sensitive topics, which you access from the property manager, as well as additional topics and graphic examples. You can search the table of contents of the index. A glossary of SolidWorks terminology is also available.

- Quick Tips: Activates context sensitive pop-up messages that appear while you're working on your document. These tips appear on how to use the active command. Most of the messages have hyperlinks; click the hyperlink to see the associated item in the SolidWorks window.

- Moving from AutoCAD: Contains an online Moving from AutoCAD guide. Many users switch from the 2D AutoCAD program to SolidWorks. This guide shows the difference between the two programs and helps to make the transition easier.

- Online tutorial: Includes practical, step by step examples of more than 20 models you can build. These tutorials cover part creation, assembly operation, drawings and several of the SolidWorks add-in programs.

- What's New Manual: Opens a printable PDF manual. The manual explains new features and changes in the current version of SolidWorks.

- Interactive What's New: Provides links to topics in the What's New Manual on new menu items and new and changed PropertyManagers. The topics describe functionality added since the previous release of SolidWorks and often include examples with sample files.

- SolidWorks Release Notes: Contains information on new SolidWorks features that weren't available when the documentation was completed. For the most up to date information, refer to this document and to online help, which is update with each SolidWorks Service Pack.

- About SolidWorks: displays the version, service pack and the serial number of your SolidWorks program.

- Toolbox Help: Takes you to an online help resource for the Toolbox add-in, which addresses all the functions and features in the Toolbox.

Solid Works also provides case sensitive help as you are working on documents. If you are working in a PropertyManager or with a command such as dimension that produces one if you require assistance on the use of this particular function or command it can be accessed through the help icon on the PropertyManager.

2.0 What is SolidWorks ?

2.0 What is SolidWorks?

SolidWorks mechanical design automation software is a *feature-based, parametric solid modelling* design tool which takes advantage of the easy to learn Windows™ graphical user interface. You can create *fully associative* 3-D solid models with or without *constraints* while utilizing automatic or user defined relations to capture *design intent*.

2.1 Feature-based

Just as an assembly is made up of a number of individual piece parts, a SolidWorks model is also made up of individual shapes/forms known as features. The SolidWorks interface allows near intuitive creation of geometric features such as bosses, cuts, holes, ribs, fillets, chamfers, and draft. As the features are created they are applied directly to the work piece. Features can be classified as either sketched or applied.

Sketched Features: One that is based upon a 2-D sketch – only this type can be used as a base feature.

Applied Features: Created directly on the solid model. Fillets and chamfers are examples of this type of feature.

To illustrate the concept of feature-based modelling, consider the part shown at the right:

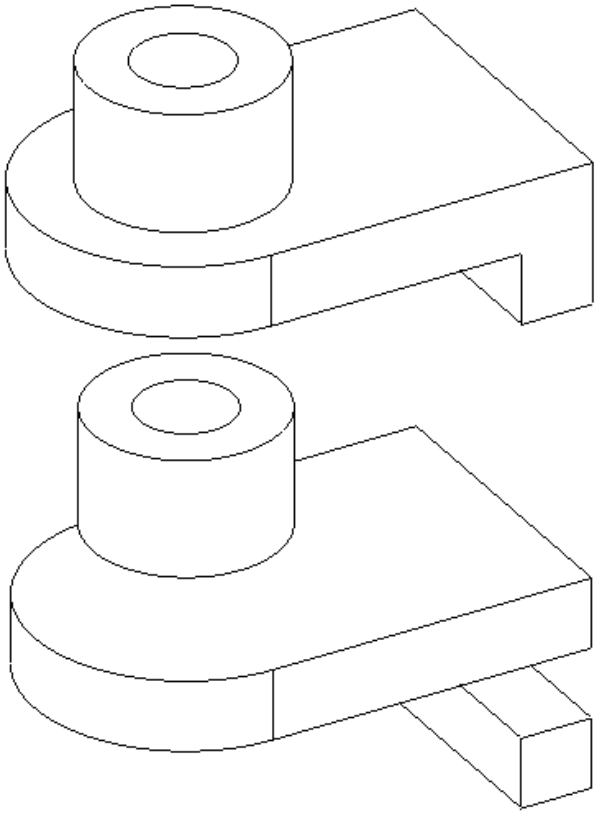

This part can be visualized as a collection of several different features – some of which add material, like the cylindrical boss, and some which remove material, like the blind hole.

If we were to map the individual features to their corresponding listing in the FeatureManager design tree, it would look like this:

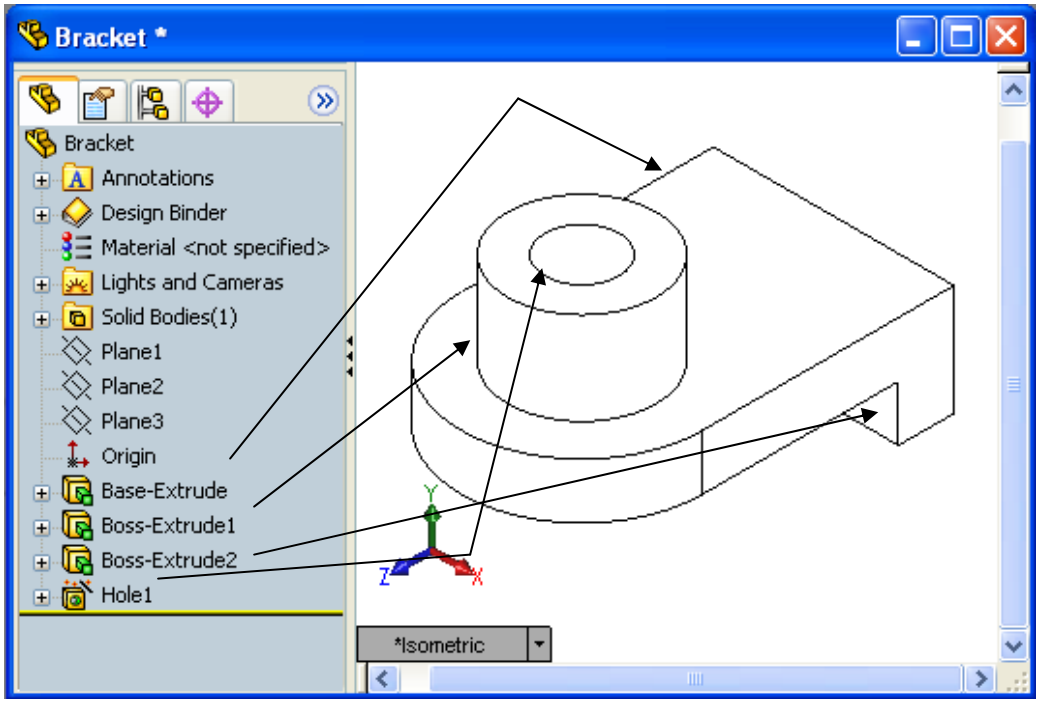

Fig 2.0: Features mapped from their position in the FeatureManager design tree to their position in the model seen in the graphics window

2.2 Parametric

The dimensions and relations used to create a feature are captured and stored in the model. This not only enables you to capture your design intent, it also allows you to quickly and easily make changes to the model.

Driving Dimensions These are the dimensions used when creating a feature. They include the dimensions associated with the sketch geometry, as well as those associated with the feature itself. A simple example of this would be a feature like a cylindrical boss. The diameter of the boss is controlled by the diameter of the sketched circle. The height of the boss is controlled by the depth to which that circle was extruded when the feature was made.

Relations: These include such information as parallelism, tangency, and concentricity. Historically, this type of information has been communicated on drawings via feature control symbols. By capturing this in the sketch, SolidWorks enables the user to fully capture your design intent up front, in the model.

2.3 Solid Modelling

A solid model is the most complete type of geometric model used in CAD systems. It contains all the wire frame and surface geometry necessary to fully describe the edges and faces of the model. In addition to the geometric information, it has the information called topology that relates the geometry together. An example of topology would be which faces (surfaces) meet at which edge (curve). This intelligence makes operations such a filleting as easy as selecting an edge and specifying a radius.

2.4 Fully Associative

A SolidWorks model is fully associative to the drawings and assemblies that reference it. Changes to the model are automatically reflected in the associated drawings and assemblies. Likewise, you can make changes in the context of the drawing or assembly and know that those changes will be reflected back in the model.

3.0 Create A Part

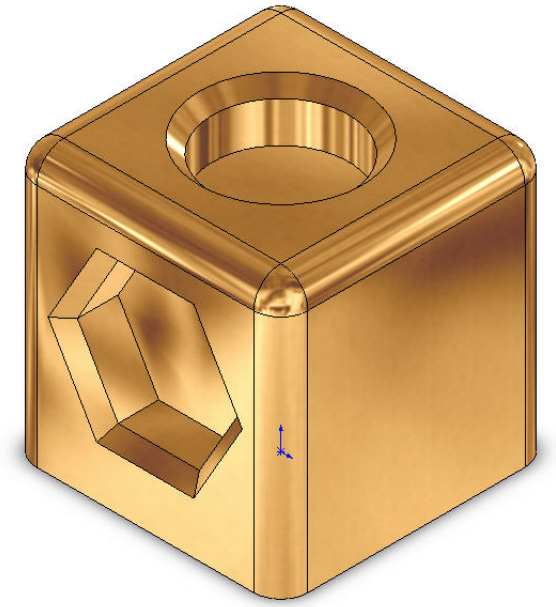

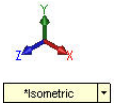

3.0 Create Your First Part

Stages in the Process

- **Create a New part document**
  New parts can be created in inch, millimetre or other units. Parts are used to create and hold the solid model.

- **Sketch the profile**
  Sketches are collections of 2D geometry that are used to create solid features. These include lines, circles and rectangles.

- **Applying Sketch relations and dimensions**
  Geometric relationships such as horizontal and vertical are applied to the sketch geometry. Dimension size the geometry while the relations restrict the movement of the entities.

- **Extruding the sketch**
  Extruding uses the 2D sketch to create a 3D solid feature.

3.1 Procedure

The process in this lesson includes sketching and extrusions. To begin with, a new part file is created.

- **Tip:** Name all your features and sketches. This is an efficient way to design particularly and vital in terms of communicating the information to others. Rename items by slowly clicking two times on a name in the FeatureManager design tree to select it and then entering a new name.
- **Important: Save your work:** save and save regularly. An assembly should be saved in the same directory as all its component files.

3.1.1 Create a New part document

1. New part

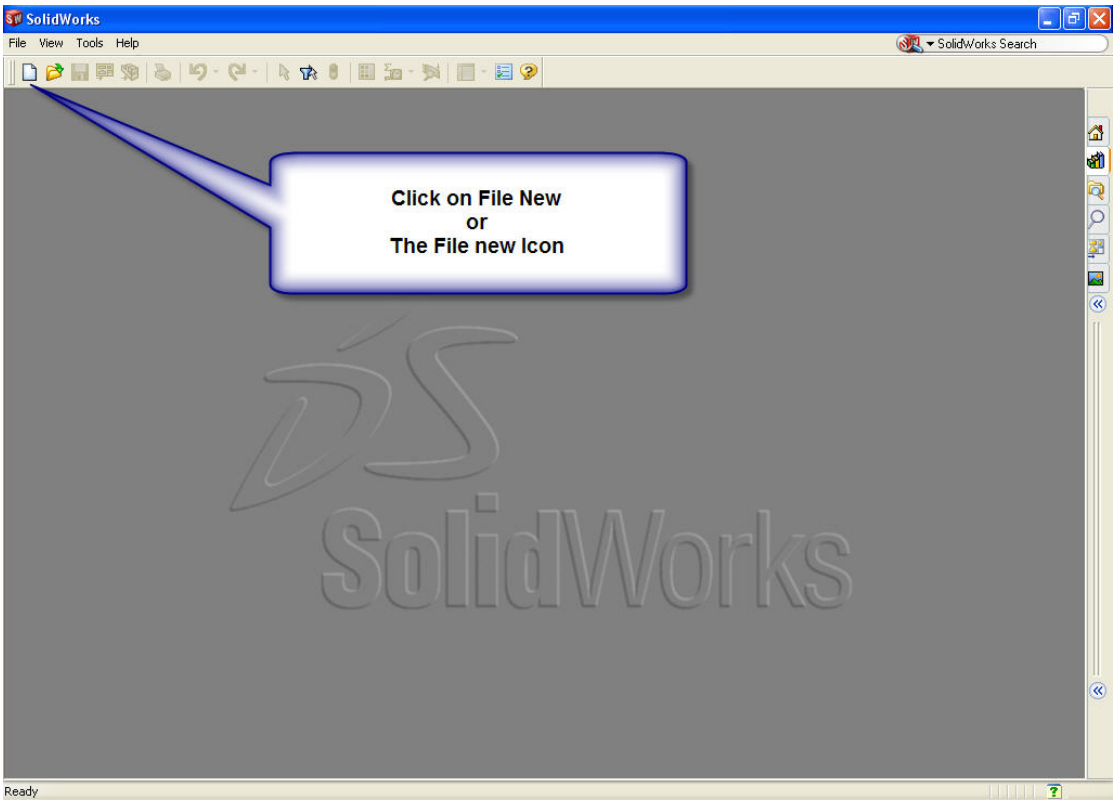

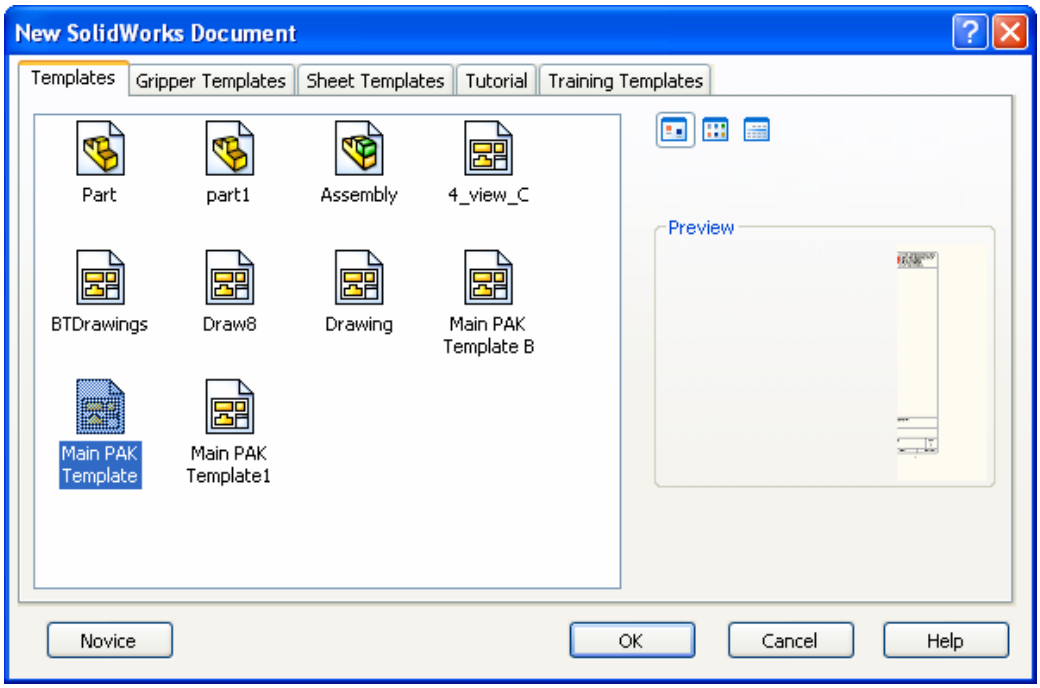

Opening a New SolidWorks document

2. Filing a part.

Using the Save option from the File menu or selecting the Save button on the Standard toolbar; file the part under the name Candle Holder. The extension, *.sldprt, is added automatically. Click Save.

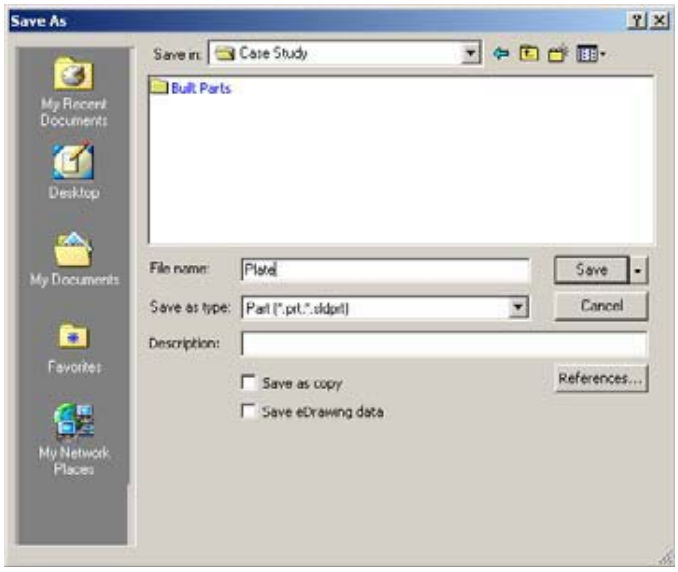

3. Select the Plane we want to Sketch on. In this case it will be the top Plane

It is important to choose the correct plane to sketch on this is done by selecting the best profile to sketch of the part. The best profile to sketch is the profile when selected extruded generated the majority or most complexities of the part.

The direction we look at to part to get the get the best profile whether it be the plan, elevation or end view will determine sketching on the Top, Front or Right Plane.

By giving careful thought to which plane is used to sketch the profile, the proper views are easily generated on the detail drawing.

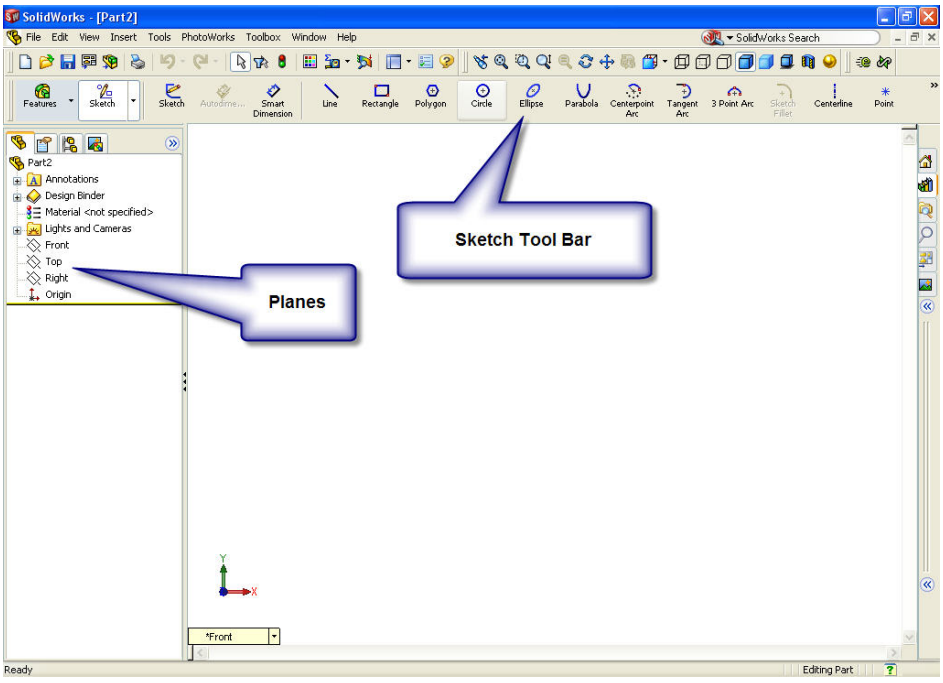

4. What is Design Intent:

Design Intent is our plan as to how our model should behave when changes are made.

How Do we Imbed Design intent?

We can imbed design intent following the steps below:

- Choose the Best Profile
- Choose the Plane
- Sketch
  - Rough Sketch
  - Automatic (sketch) Relations
  - Added Relations
  - Dimensions
  - Equations
  - Link Values
- Extrusion
  - Type of extrusion used
- End Condition
  - Blind
  - Mid Plane

5. Create our sketch by selecting the Top Plane and then the Sketch Icon

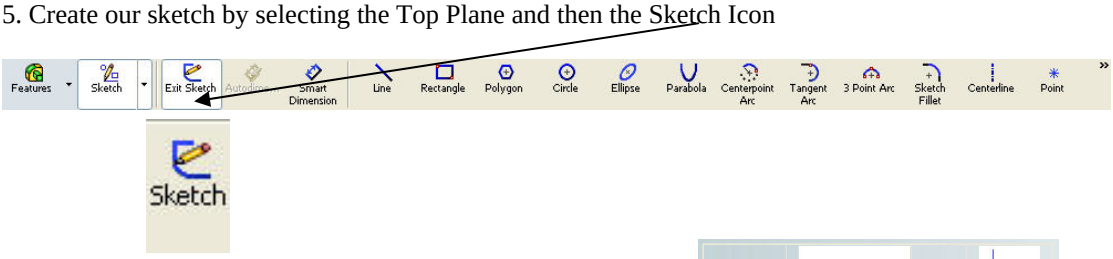

- ***Rule of Thumb When Sketching***
  - Rough Sketch
  - Add Relations
  - Add Dimensions

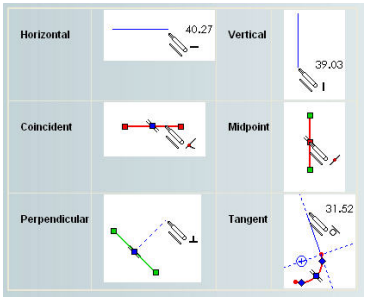

Relations such as parallel, horizontal, vertical and tangent and so on, can be automatically added to the sketch while sketching.

- Link Values / Equations

6. We know we are actively in a sketch by the following screen.

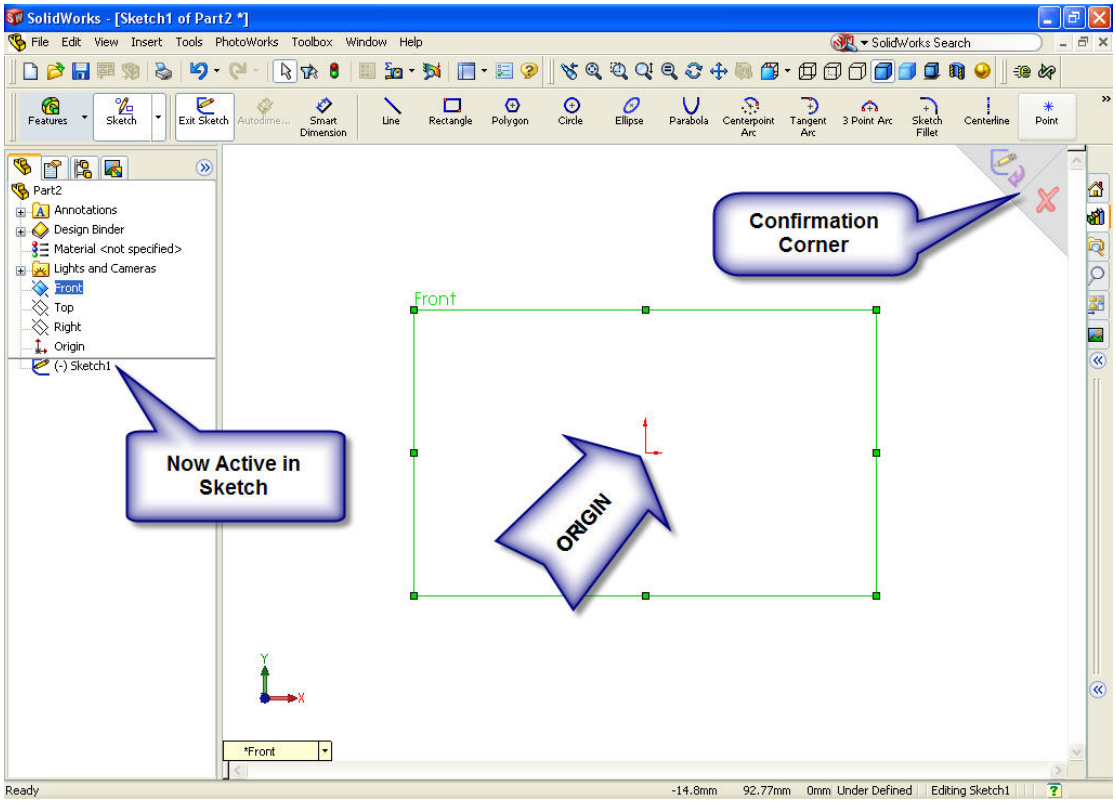

7. Select the Line Command on the sketch toolbar and draw a rectangle on the screen.

The positioning of the sketch in relation to the origin is important. (your sketch must be attached to the origin in some form in order to fully define the sketch)

Tip: By positioning the origin in the centre of the square - using a construction line the origin is positioned in the centre. This enables you to place the circle in the centre of the cube very easily later on.

Also your Front and Right Plane split cube about the centre.

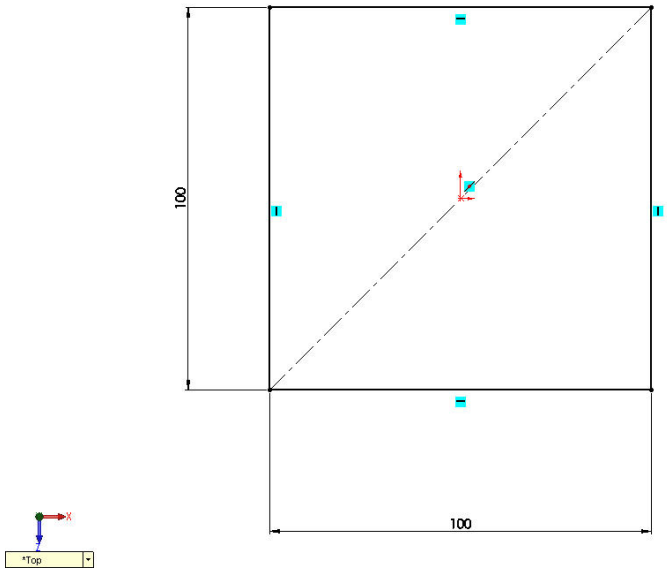

8. Dimension the Sketch 100mm X 100mm using the dimension icon

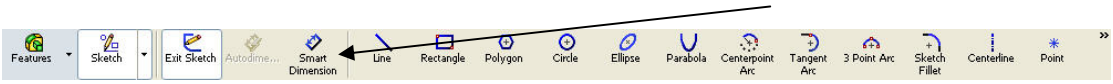

9. Conditions of a Sketch.

Under Defined

There is inadequate definition of the sketch, but the sketch can still be used to create features. This is good because many times in the early stages of the design process, there isn't sufficient information to fully define the sketch. When more information becomes available, the remaining definition can be added at a later time. Under defined sketch geometry is blue (by default).

Fully Defined

The sketch has complete information. Fully defined geometry is Black (by default). As a general rule, when a model is completed, the sketches within it should be fully defined.

Over Defined

The sketch has duplicate dimensions or conflicting relations and it should not be used until repaired. Unnecessary dimensions and relations should be deleted. Over defined geometry is red (by default).

9. Select the Features Icon on the Command Manager.

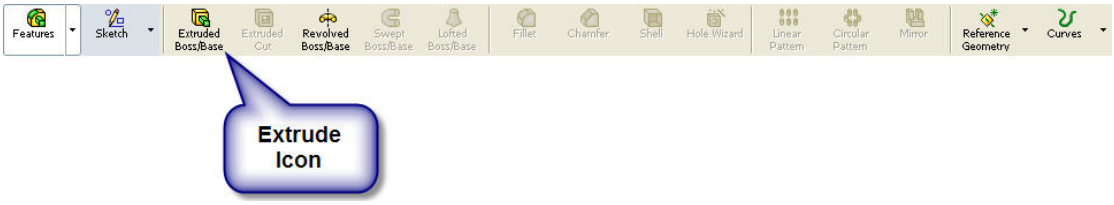

10. Select the extrude command and extrude the 2d Profile 100mm

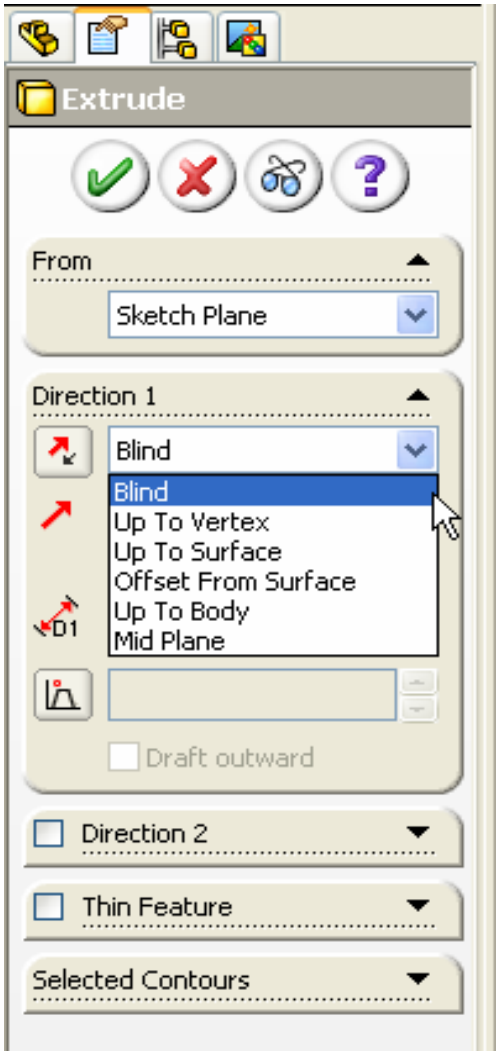

Design Intent at extrusion stage.

- Examples of design intent in respect of features
  - Base Extrude
  - Revolve
  - Cut Extrudes
  - Shell
  - Fillets
  - Chamfer

- Examples of design intent in respect to End Conditions of features
  - Blind
  - Through all
  - Mid-plane
  - Up to Next
  - Up to Surface

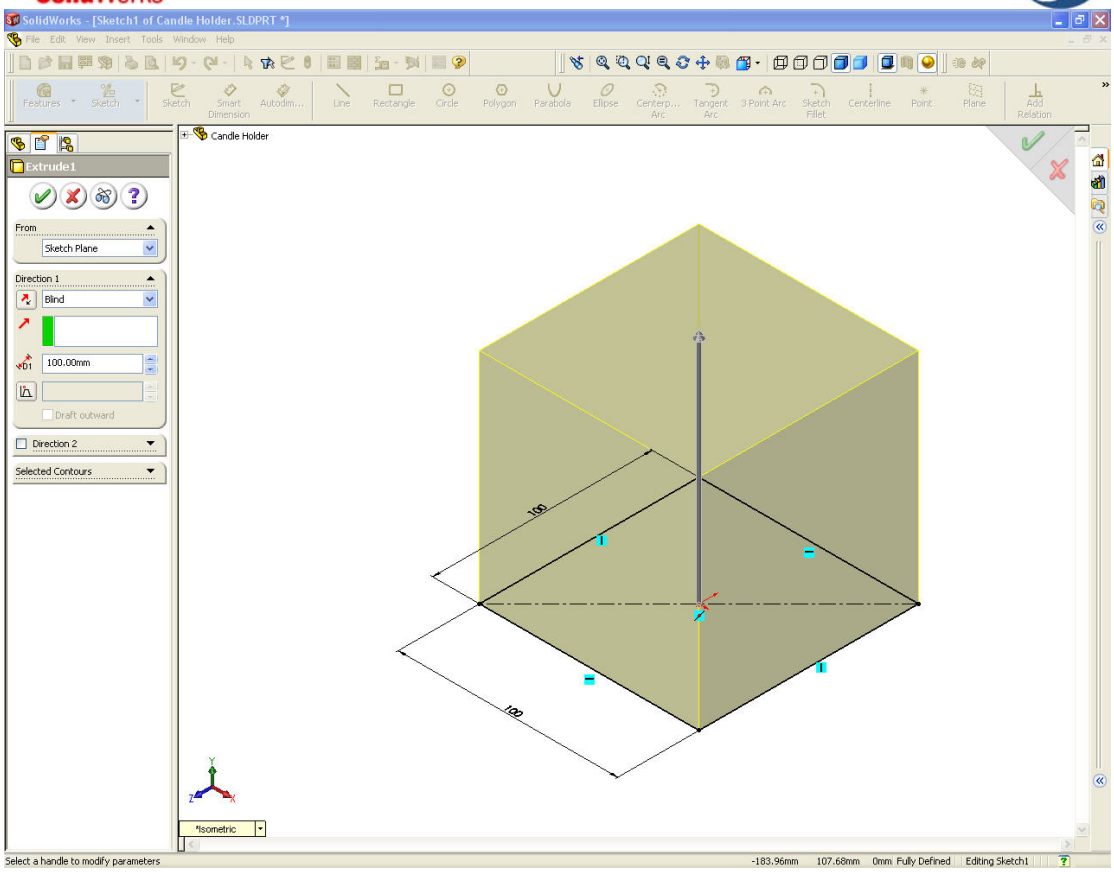

11. Select Top Face of the Cube and create a sketch by selecting the Sketch icon

12. Select a circle command start the center of the circle at the origin.

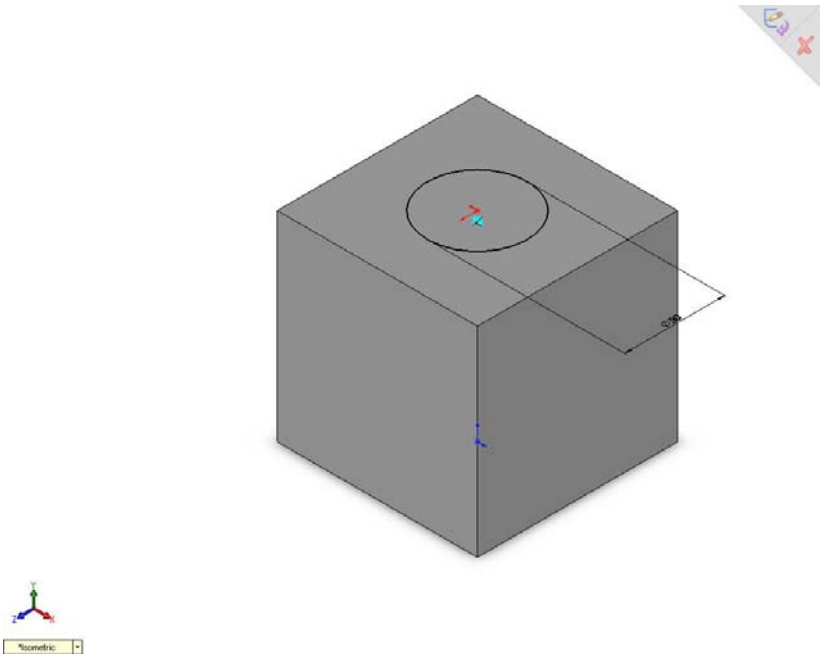

13. Give the circle a dimension of 50mm.

14. Select the Cut Extrude command form the Feature Tool Bar.

15. Cut Extrude Blind into the cube 20mm.

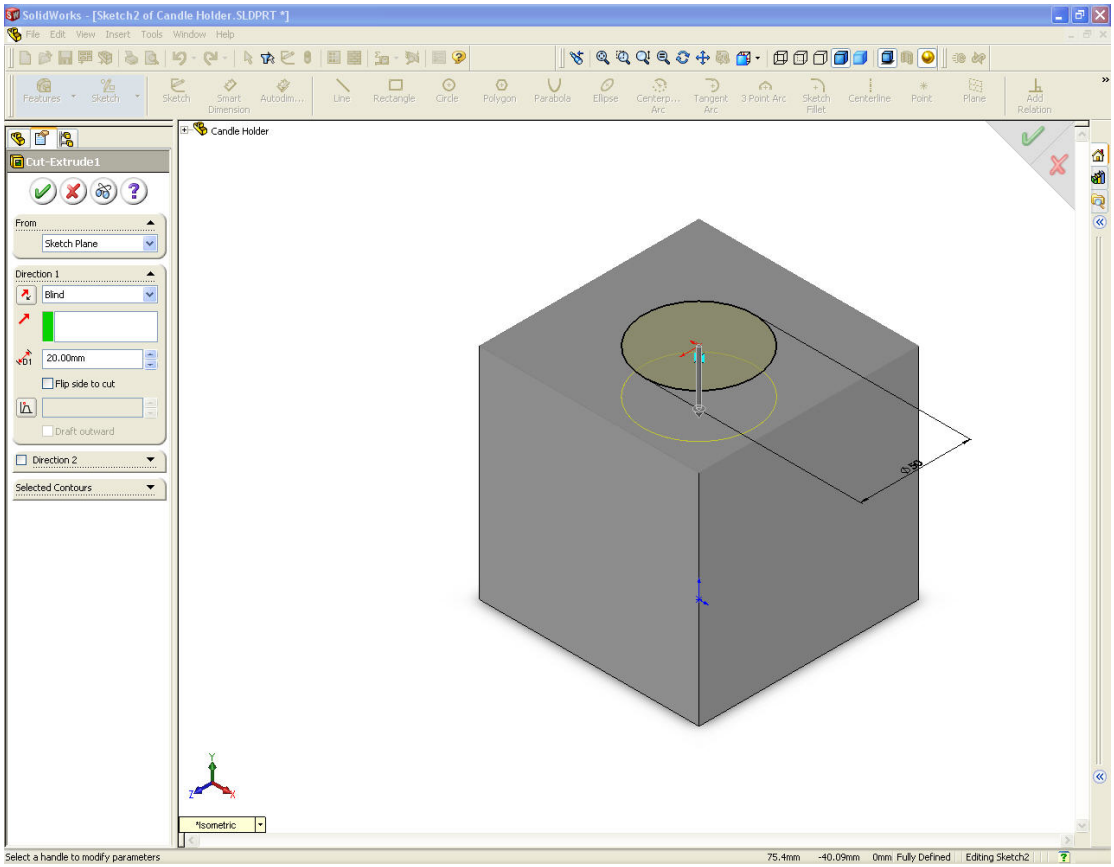

17. Create a Sketch on the Front Face of the Cube.

18. Using the Centre Line command sketch a centre line across the diagonal

19. Using the Polygon Command, sketch a polygon starting on the midpoint of the centre line.

20. Select the top line of the polygon and add the relationship of horizontal in the Property Manager

21. Dimension the top line of the polygon 30mm.

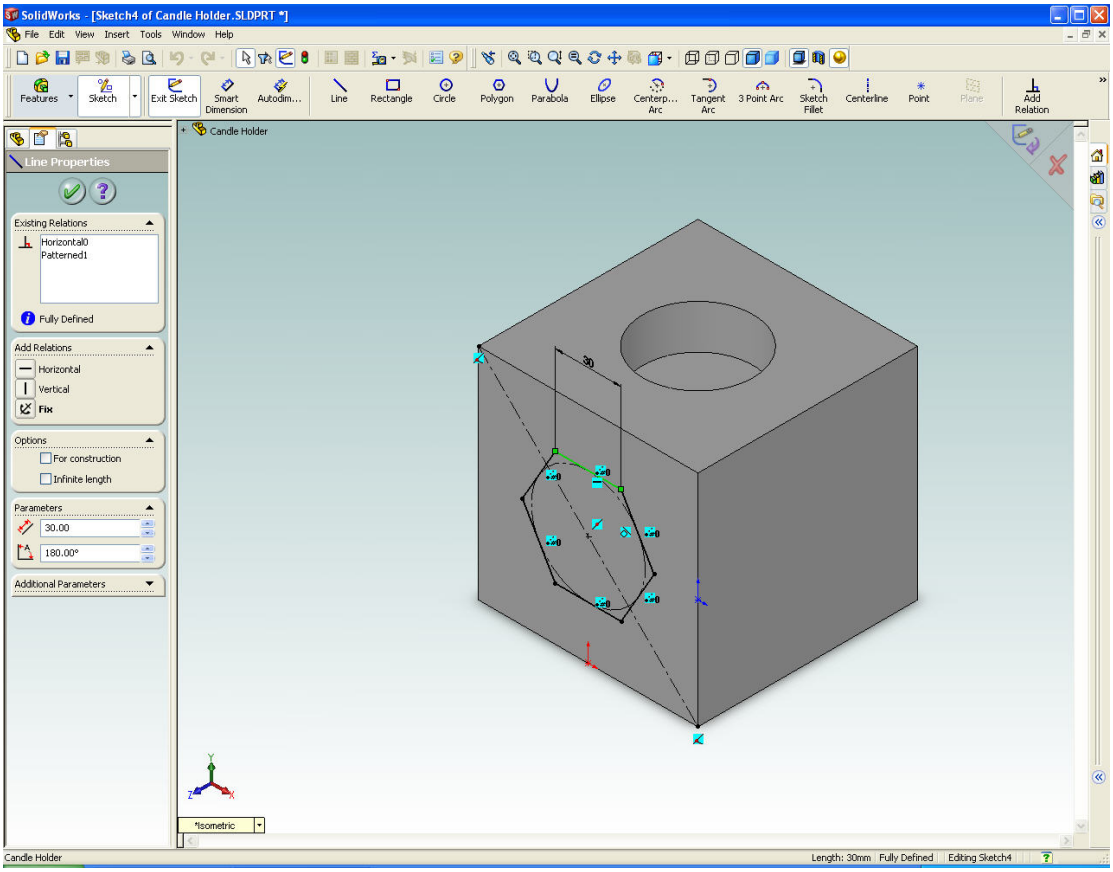

22. Cut Extrude the Sketch 20mm

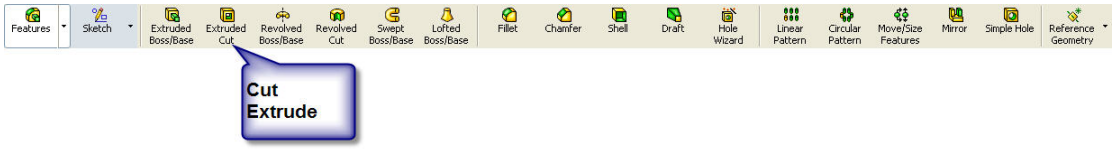

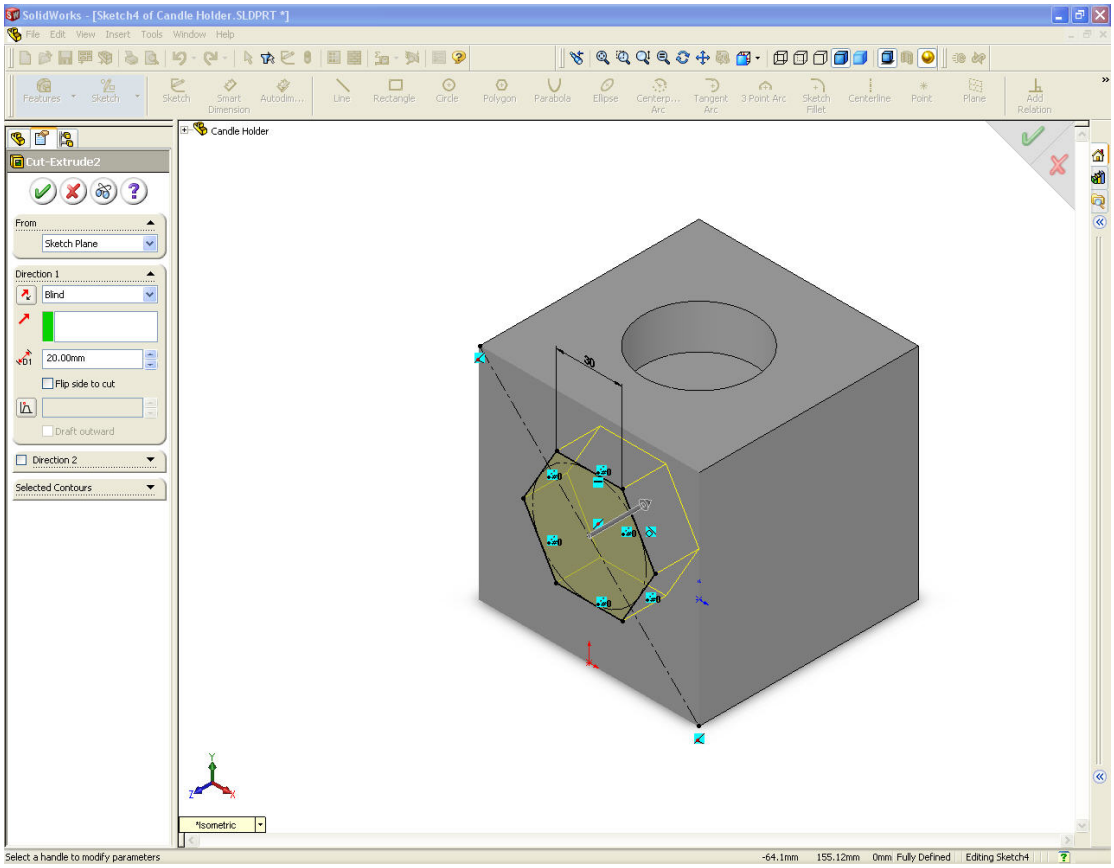

23. Add a chamfer to the Polygon.

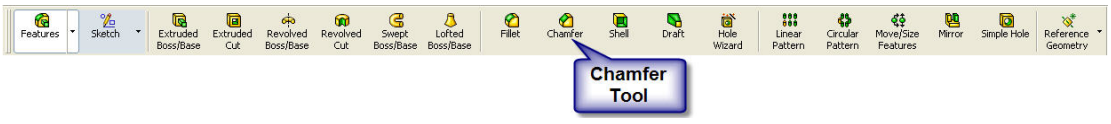

24. Select the Chamfer icon from the Features Tool Bar

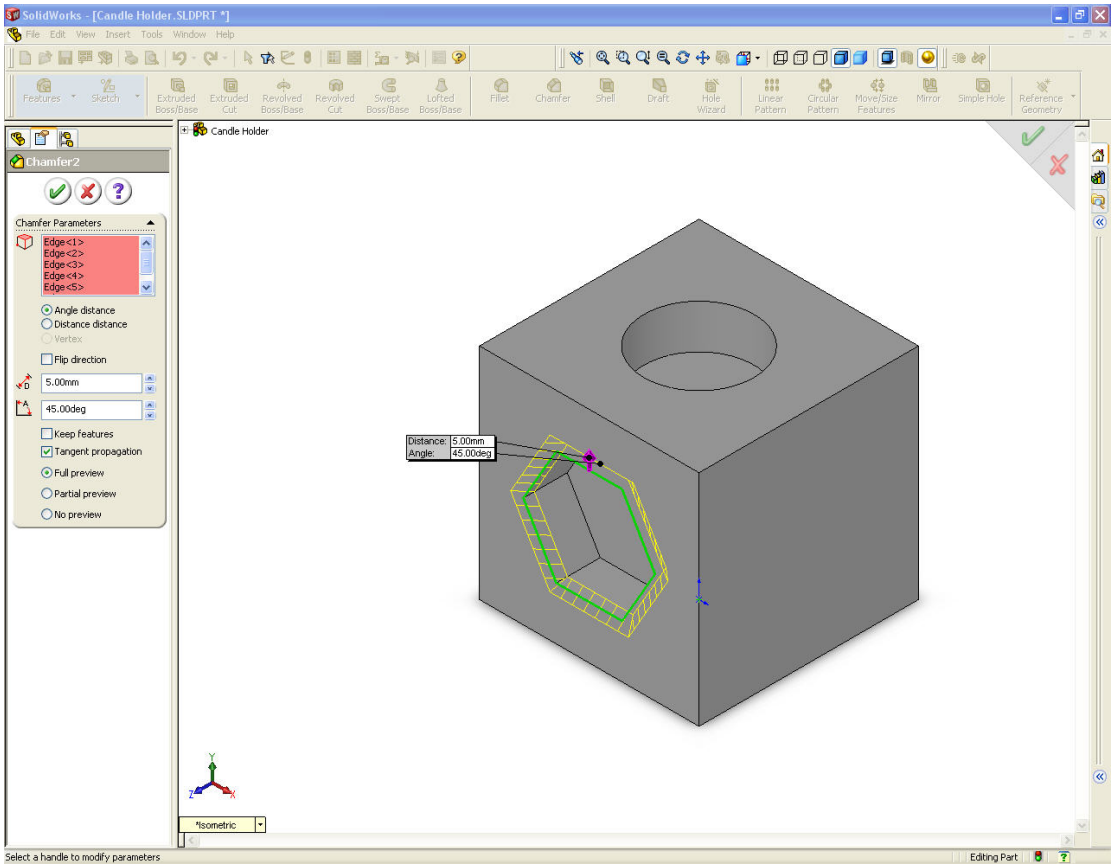

25. Select all 6 edges of the Polygon. Distance 5mm with an angle of 45 deg.

26. Apply the same chamfer to the edge of the circle.

27. Add Fillet to all 8 edges as can be seen in Picture.

28. Select Fillet command from the Features Tool Bar.

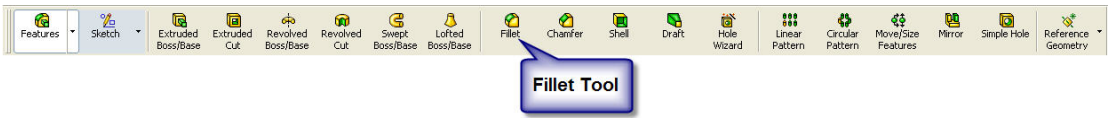

29. Select all 8 edges as per picture apply 10mm fillet. Preview of fillet will show before accepting, click on the green arrow to accept.

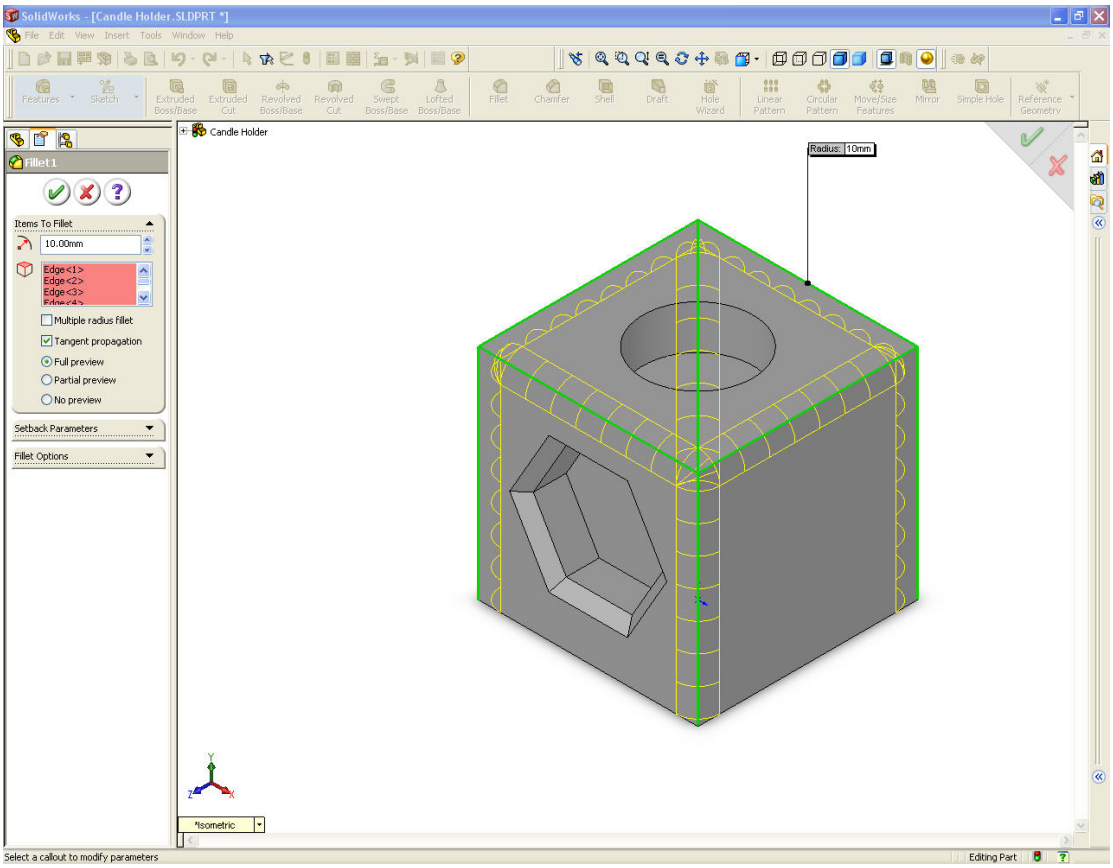

30. Apply a material to the Candle Holder. In the Feature Manager right click on add material and select brass and say ok.

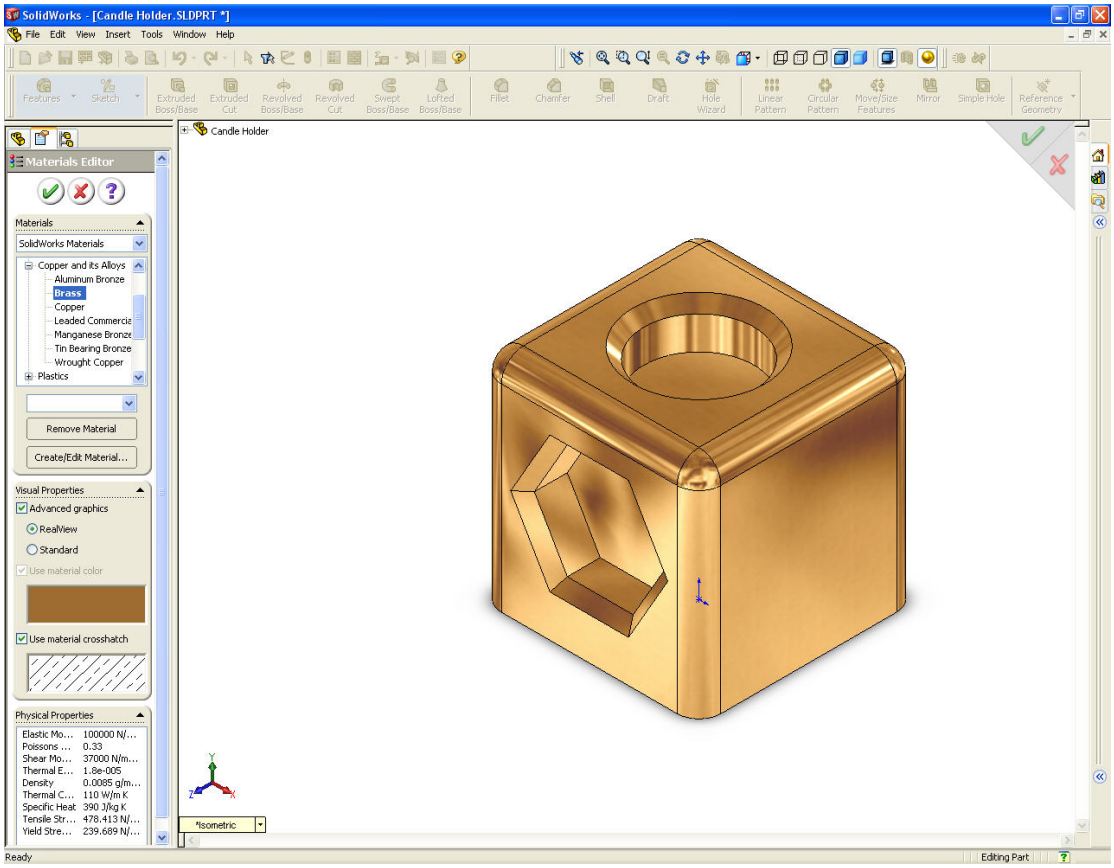

31. Save the Part File.

4.0 Create A Drawing

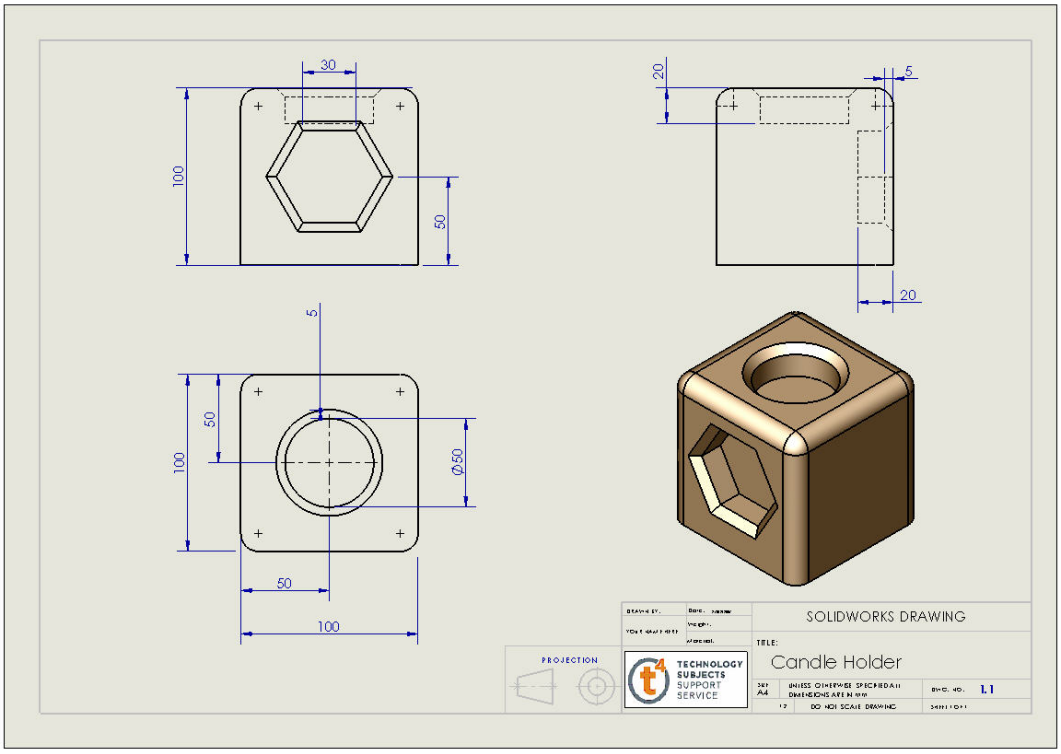

1. Click on Make a drawing in the Standard Icon Toolbar.

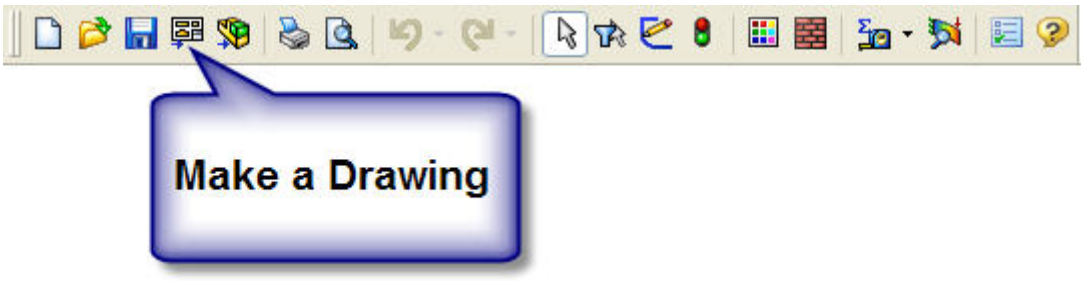

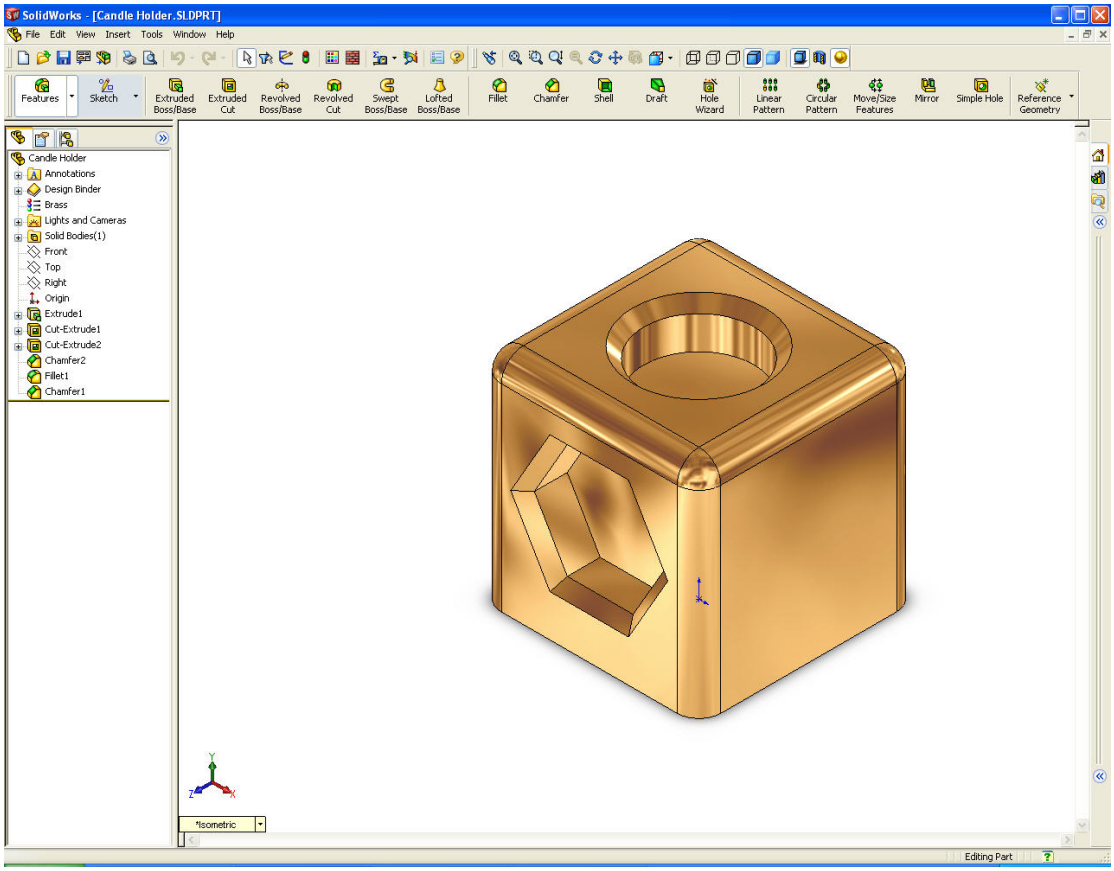

2. Select Drawing A4L

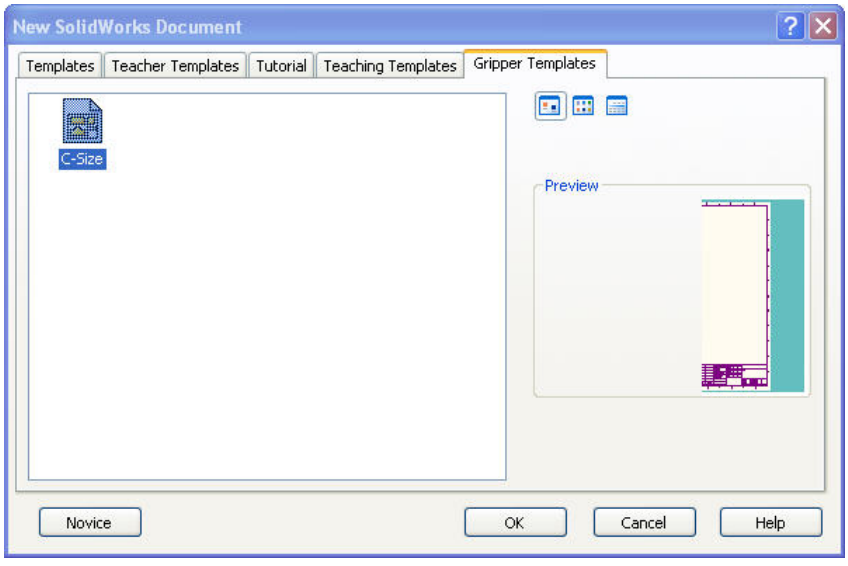

3. Position the Front Elevation on the drawing sheet and Left click.

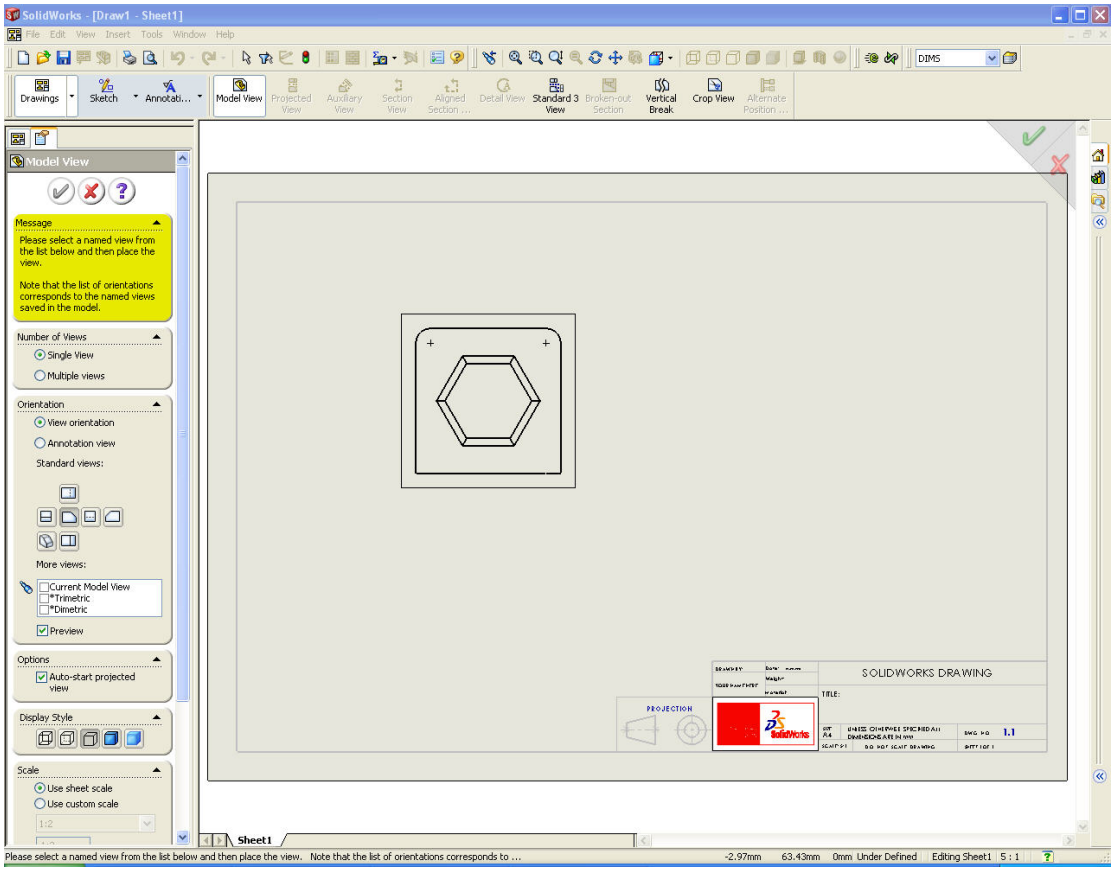

4. Move Mouse to the Left of the Front Elevation to Create the Side Elevation (left click to position view)

5. Move Mouse Under the Front Elevation to Create the Plan View / Top View (left Click to position View)

6. Move Mouse up too the Left Diagonal of the Front View to Create the isometric view. Hold down the Ctrl key and position the view under the Side Elevation. (Left Click to Position View)

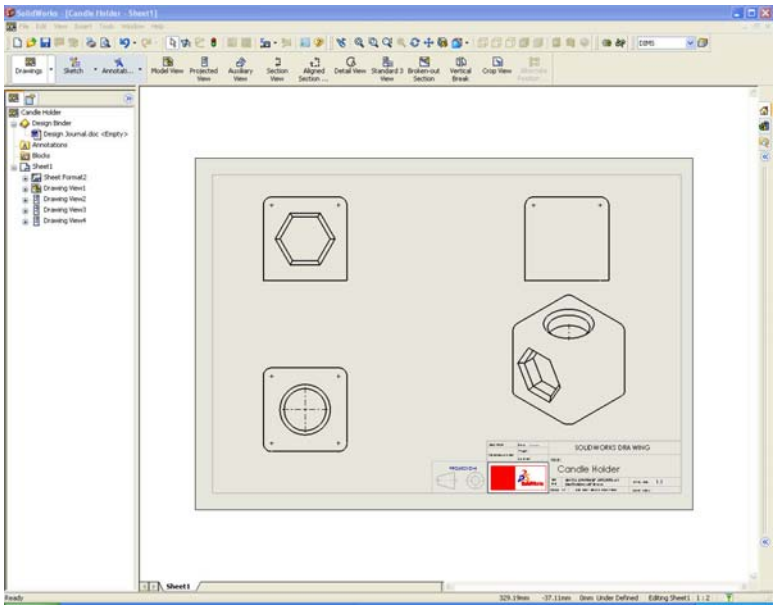

7. Hold Down the Ctrl Key and Select all Drawing Views.

8. Select the Hidden Lines icon from the views toolbar to show hidden lines in all views.

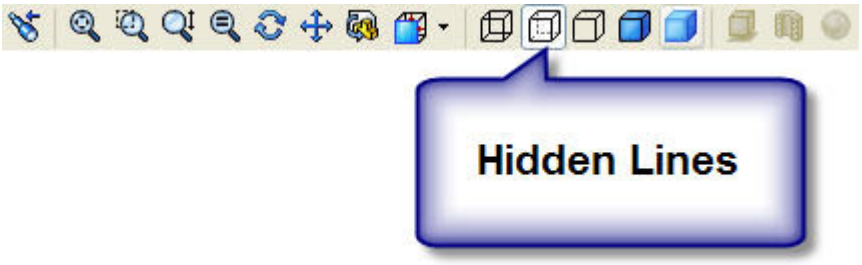

9. Drawing Views Should Look like below

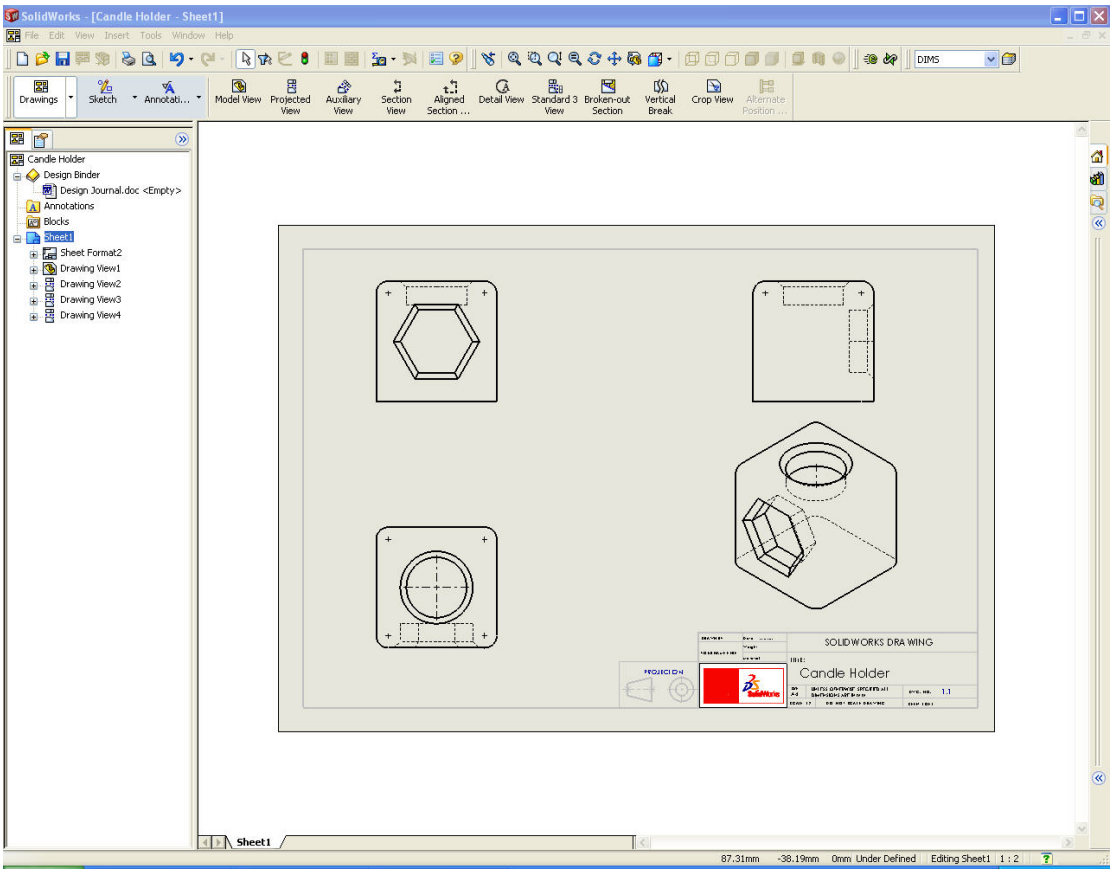

10. Select the Isometic view and click on the shaded view Icon with edges

11. Select Annotations Tab on the Command Manager.

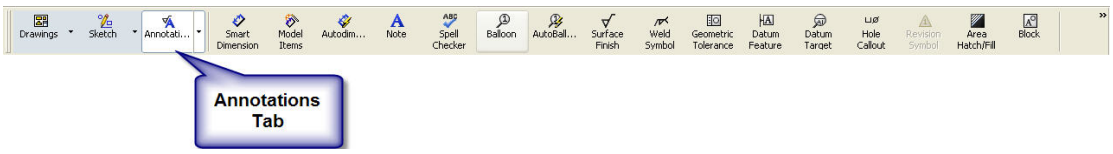

12. To Insert Dimensions to the model select Insert Model Items. Make sure these are been applied to the entire model

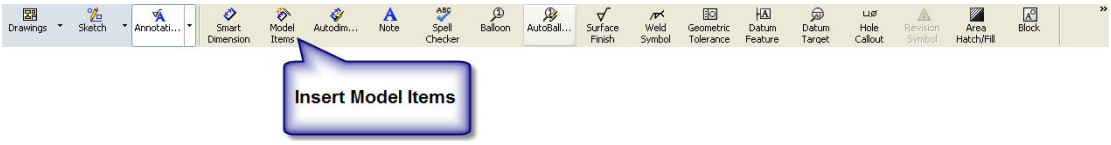

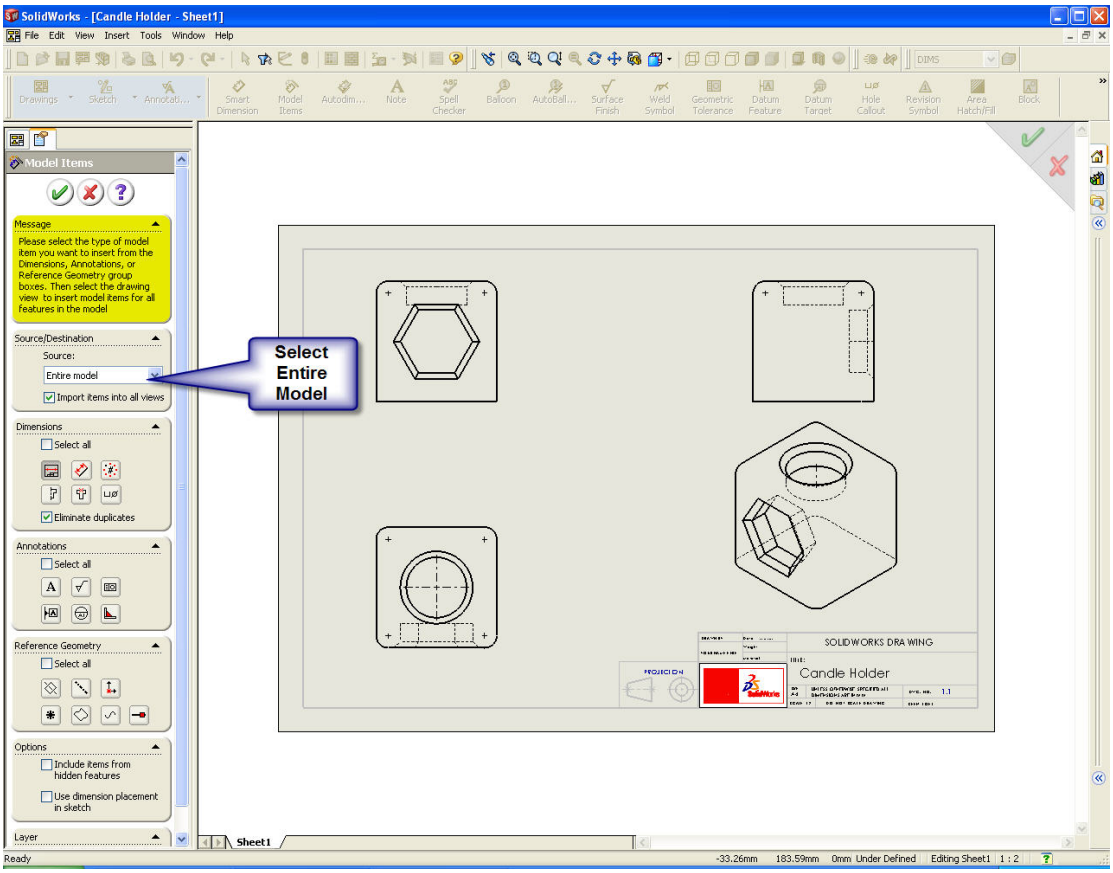

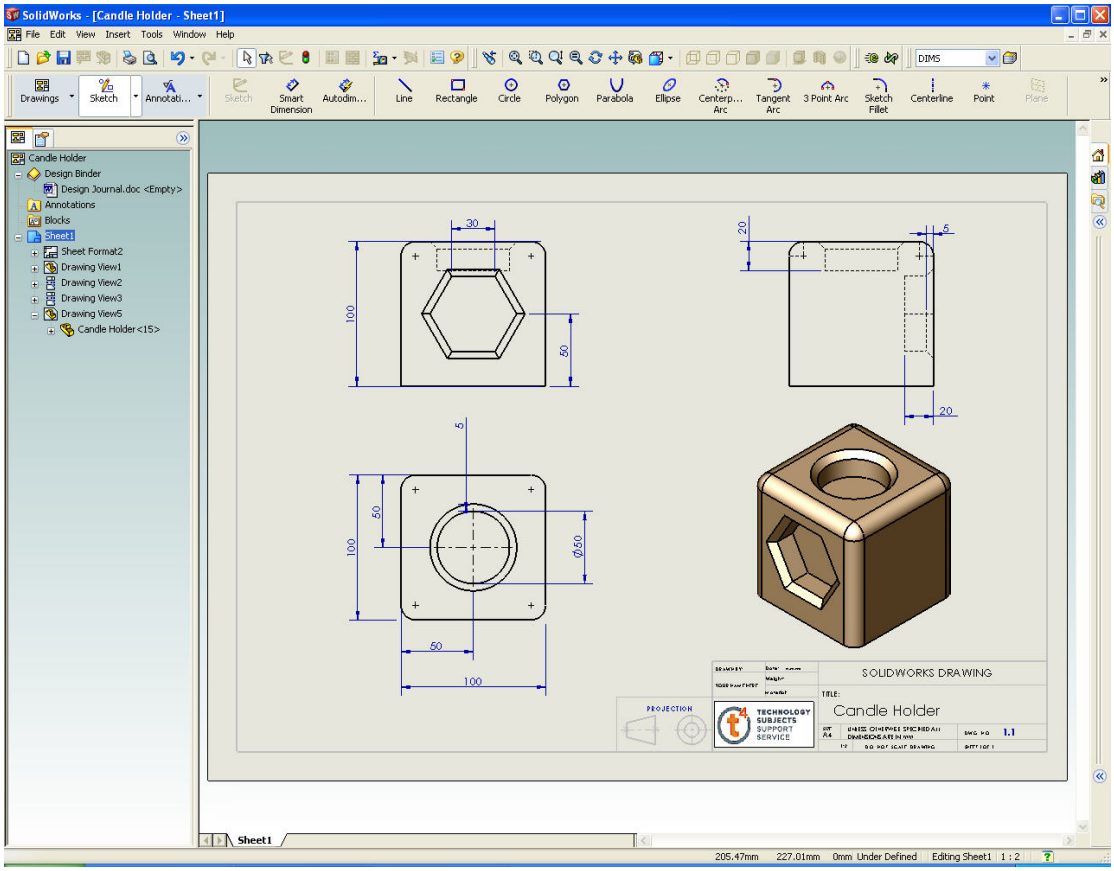

13. Smart dimensions can be used to apply any missing dimensions manually.

14. Save and Close your Drawing.

5.0 Create An Assembly

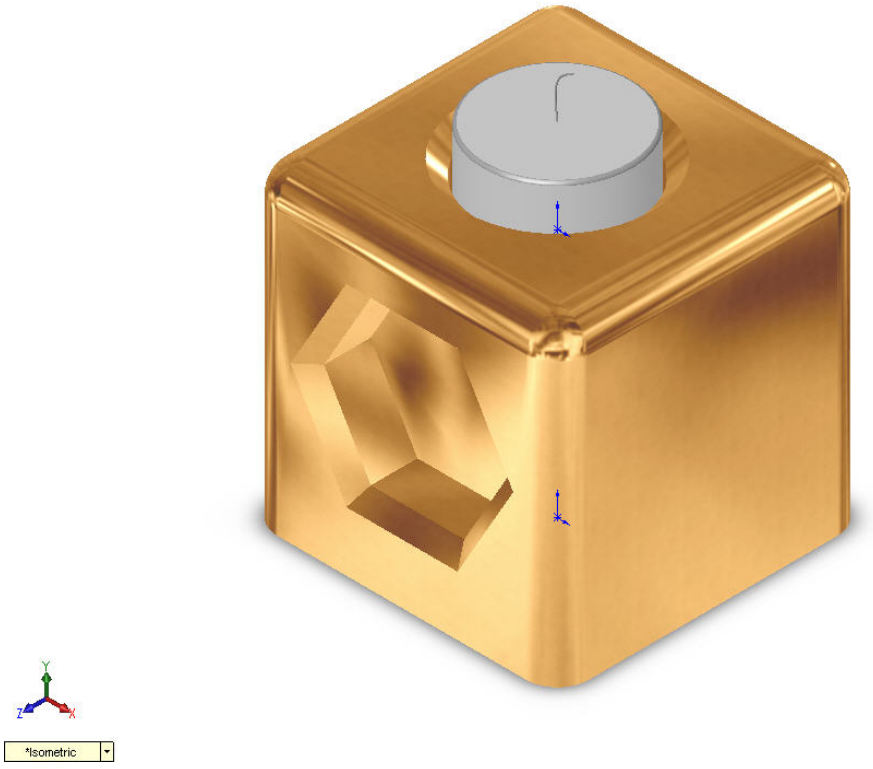

1. Open the Candle Holder.

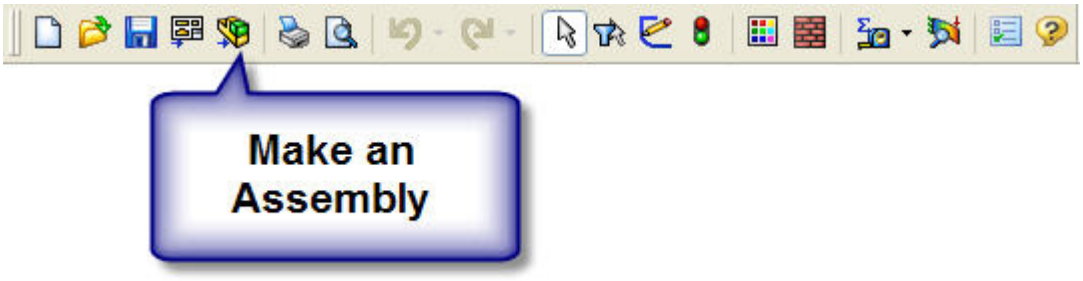

2. Select Make assembly icon form the standard toolbar icons.

3. Select the Candle holde in the open Documents box that shows in the property manager

4. Select the Green tick to place the Candle Holder in an Assembly.

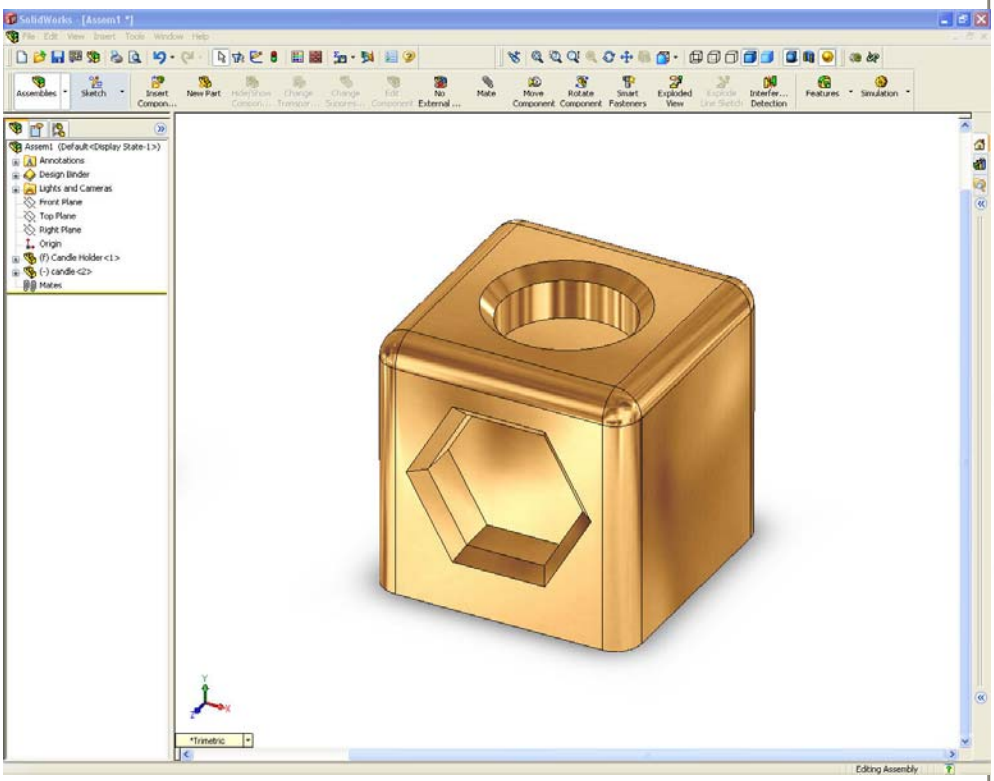

5. Creat a part named candle at appropriate size (Diameter 50mm) and save to the same location as the candle holder. Open this part.

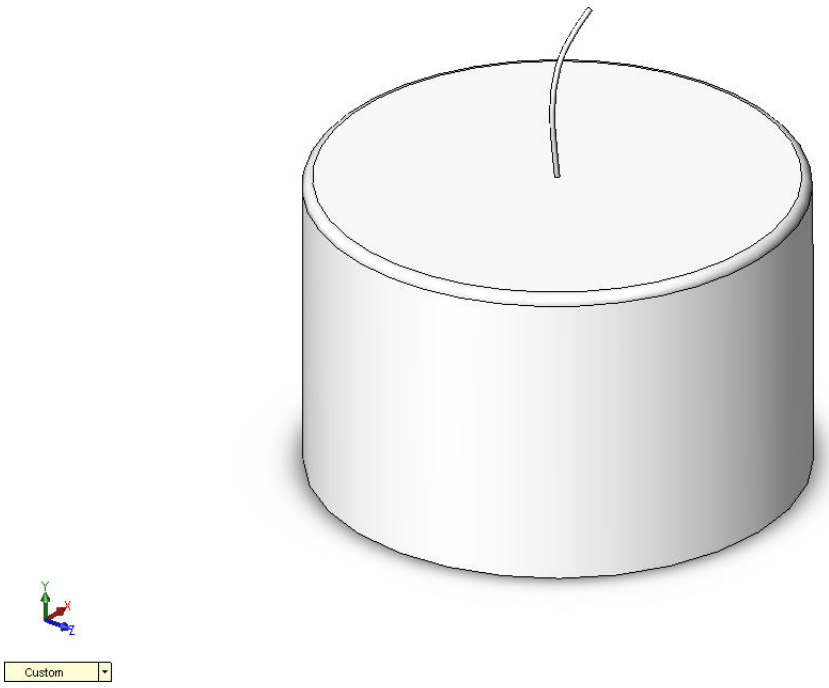

6. Tile Windows Horizontally

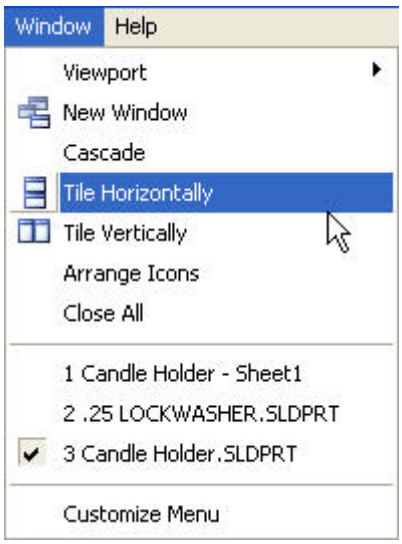

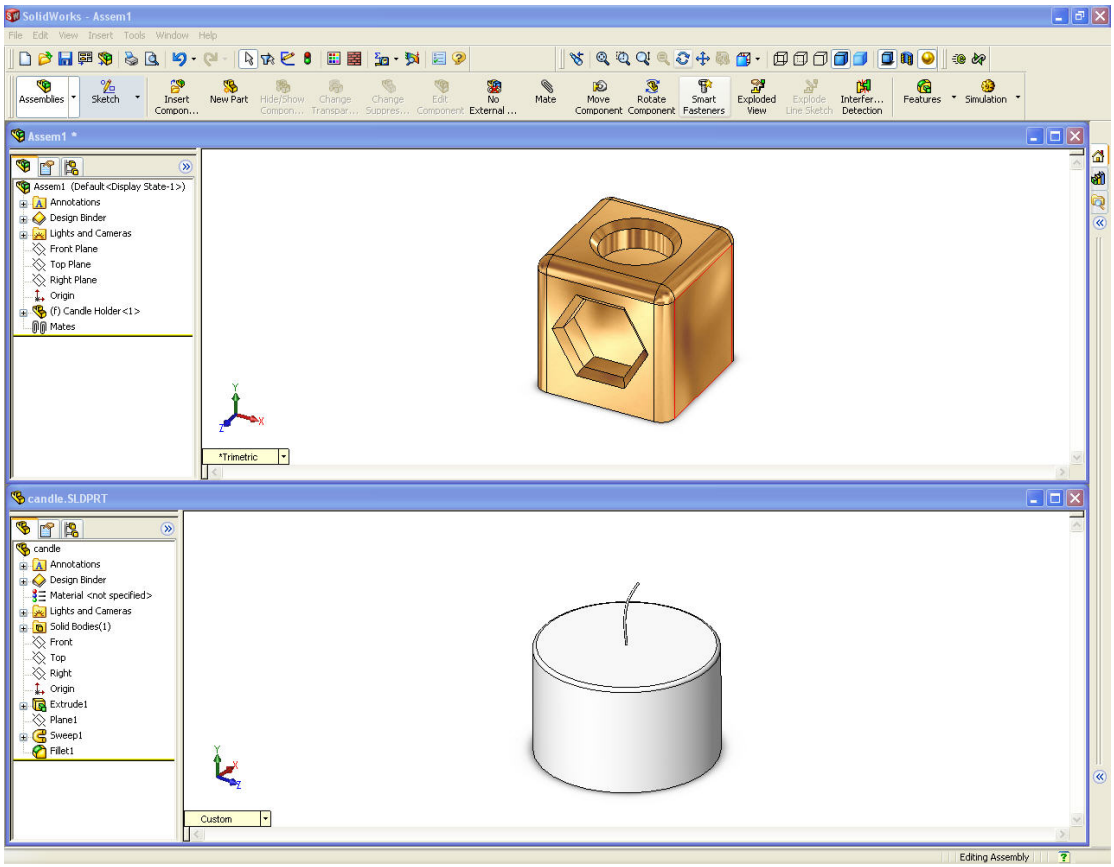

7. Drag and Drop the Candle into the Assembly leave float in mid air.

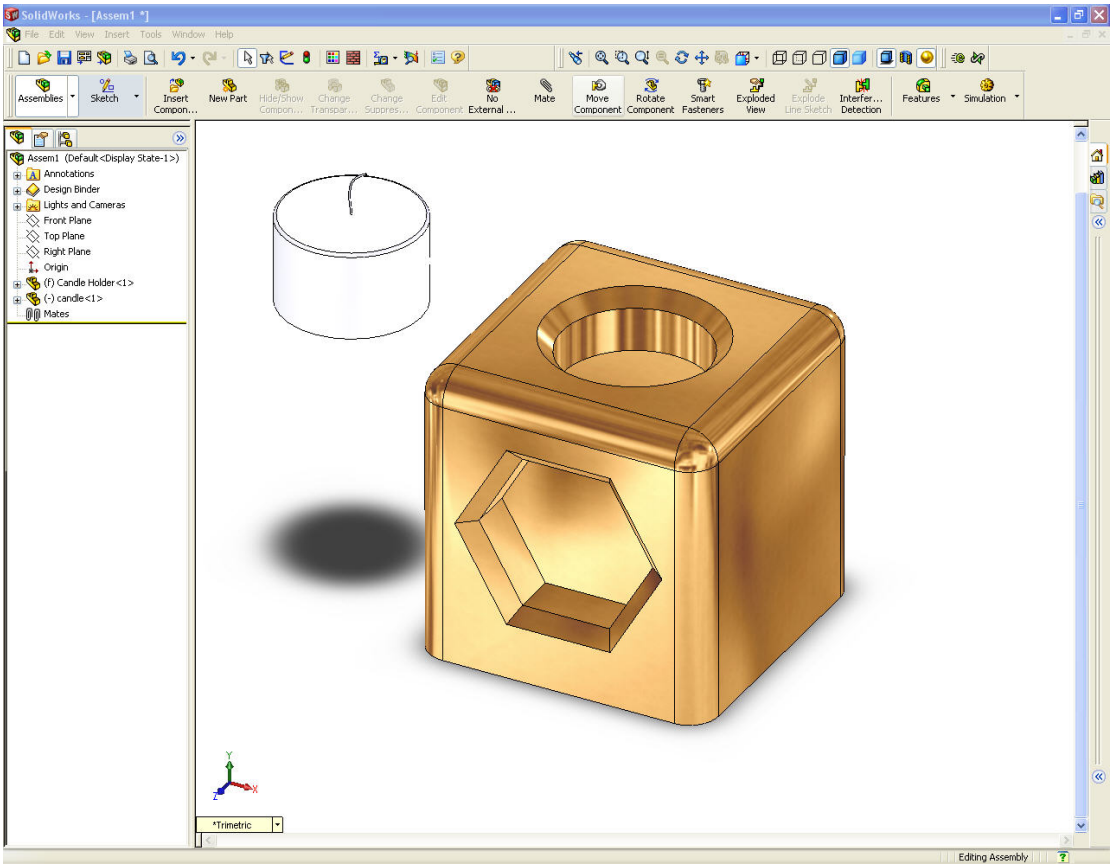

8. Add mates to position the Candle in the Holder. On the Assemblies toolbar select the paper clip icon.

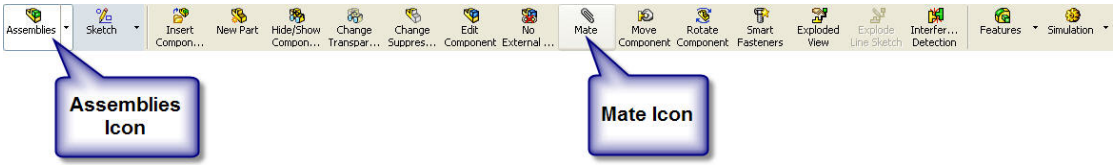

9. Select the Two Cylindrical faces to align the candle to the hole in the holder. Use concentric mate.

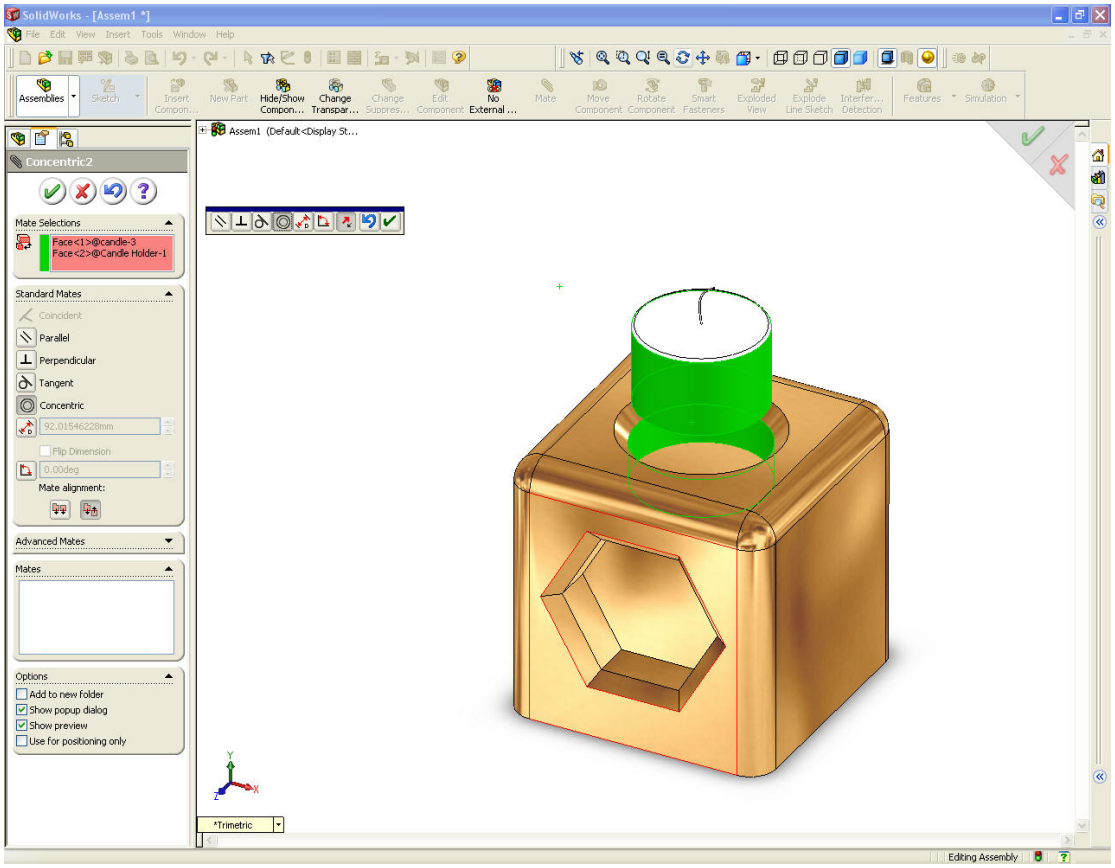

10. Select the bottom face of the candle and the top face of the inside the hole and apply a coincident mate.

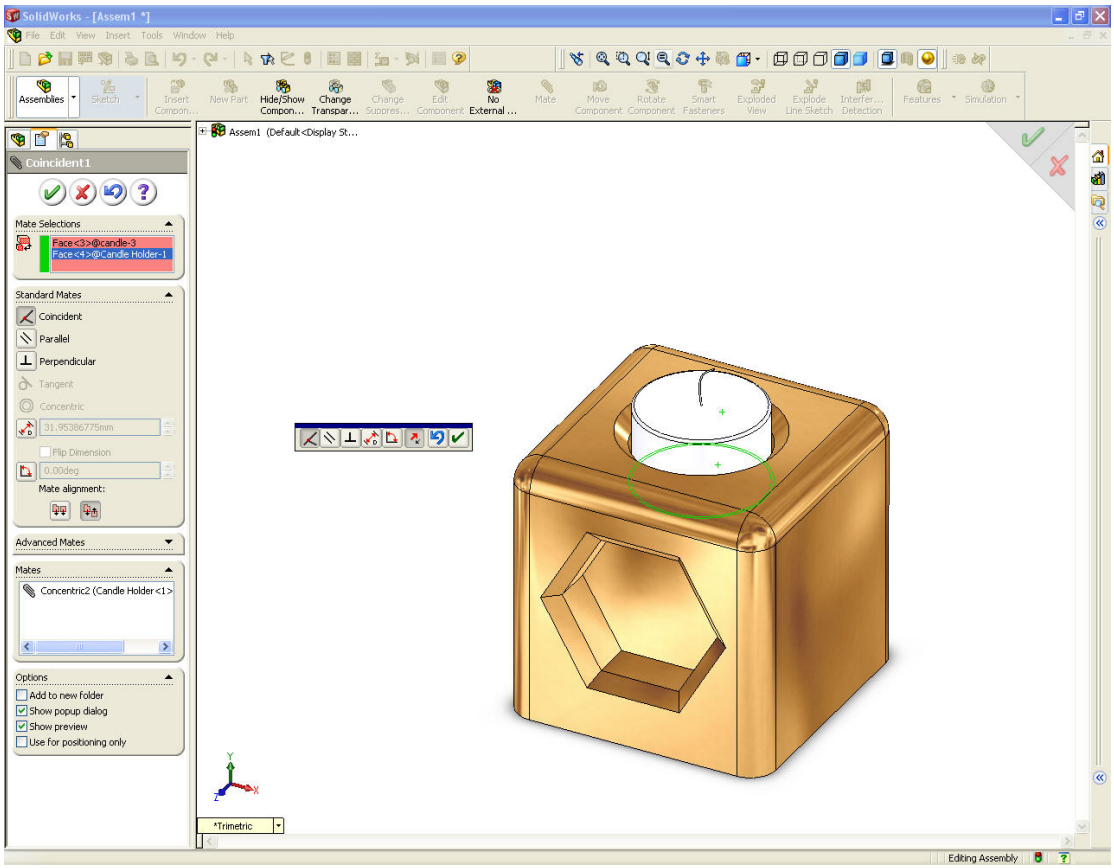

11. Now you have created your first assembly save the document.

12. Now Create you own Drawing of the assembly following the part Drawing example.

6.0 Exercises

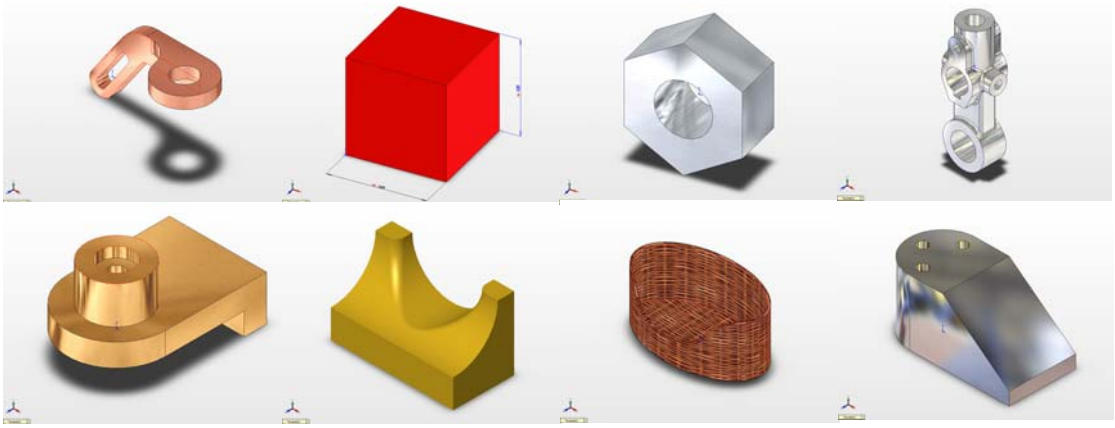

Exercise 1: Cube.

1.1 Objectives of this Lesson

- Model the Cube.
- New commands: **Extrusion**

1.2 Lesson Outline

- Sketch rectangle on the Top Plane.
- Add equals relationship to all sides.
- Extrude the Sketch 100mm.
- Link Values of the dimensions.

1.3 Design Intent

- Changing one Dimension gives different size cubes

1.4 Productivity Tip

- Add relations before you add dimensions

1.5 Modelling Tasks

- Fully define the part using only the given dimensions.

1.6 Create a Drawing

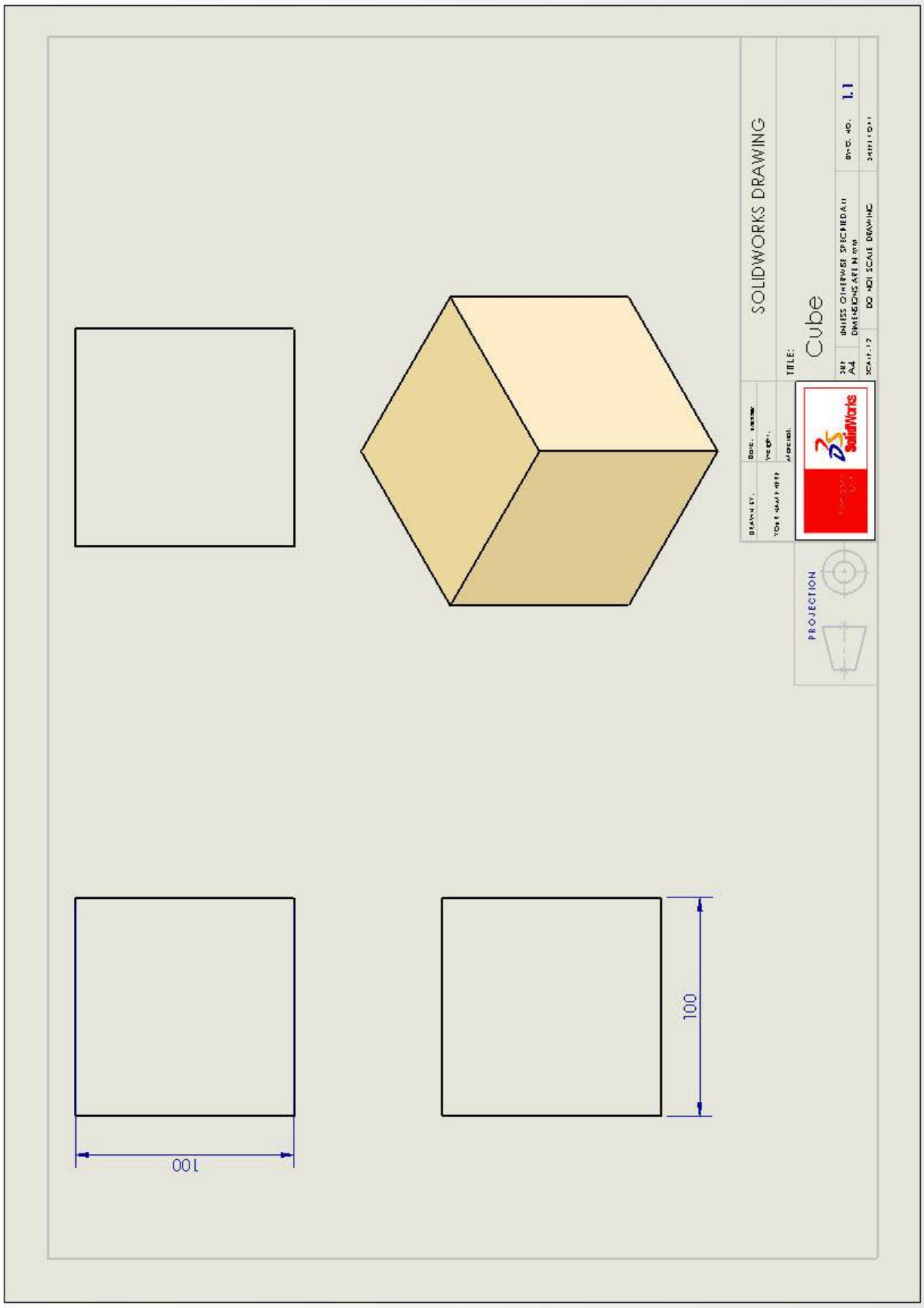
SOLIDWORKS DRAWING
Cube
100
100

Exercise 2: Nut.

2.1 Objectives of this Lesson

- Model the Nut.
- New commands: **Extrusion.**

2.2 Lesson Outline

- Sketch Polygon on the Front Plane
- Include the circular hole in the sketch.
- Extrude the profile.

2.3 Design Intent

- One feature should be used.

2.4 Productivity Tip

- You can embed the hole in the initial sketch

2.5 Modelling Tasks

- Fully define the part using only the given dimensions.

2.6 Create a Drawing

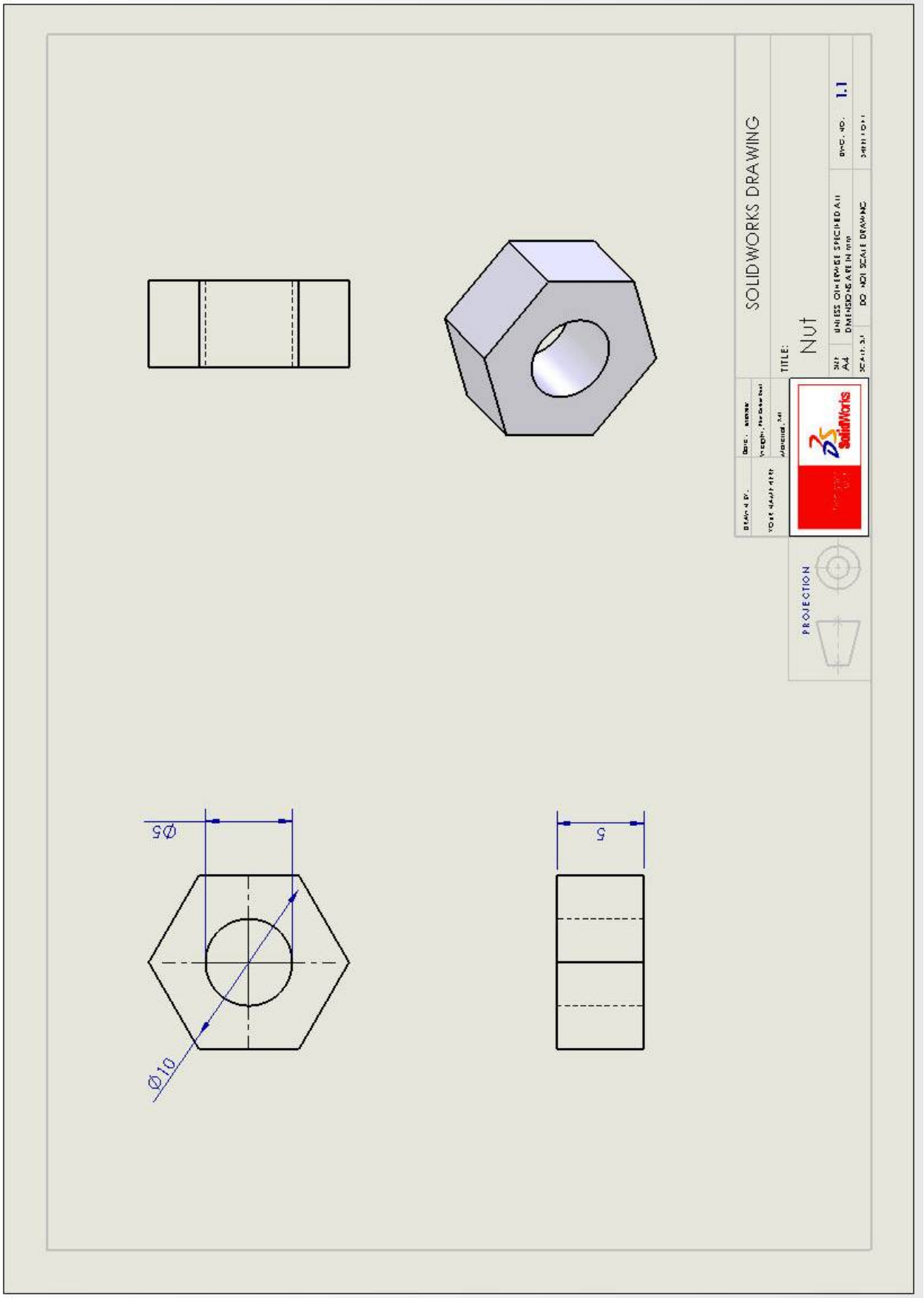
SOLIDWORKS DRAWING
TITLE:
Nut
A4
1.1
DO NOT SCALE DRAWING
PROJECTION
Ø5
Ø10
5

Exercise 3: Cone.

3.1 Objectives of this Lesson

- Model the Cone.
- New commands: **Revolve Feature**

3.2 Lesson Outline

- Sketch a Vertical Centre Line on the Front Plane.
- Sketch a Triangle using The Dimensions on the Drawing.
- Revolve the Sketch around the Centre Line Created.

3.3 Design Intent

- Use Revolve Feature to Create the Part
- The axis of the Cone should pass through the origin.

3.4 Productivity Tip

- The Length of the Centre Line does not have to be the same height of the cone it can be larger.

3.5 Modelling Tasks

- Fully define the part using only the given dimensions.

3.6 Create a Drawing

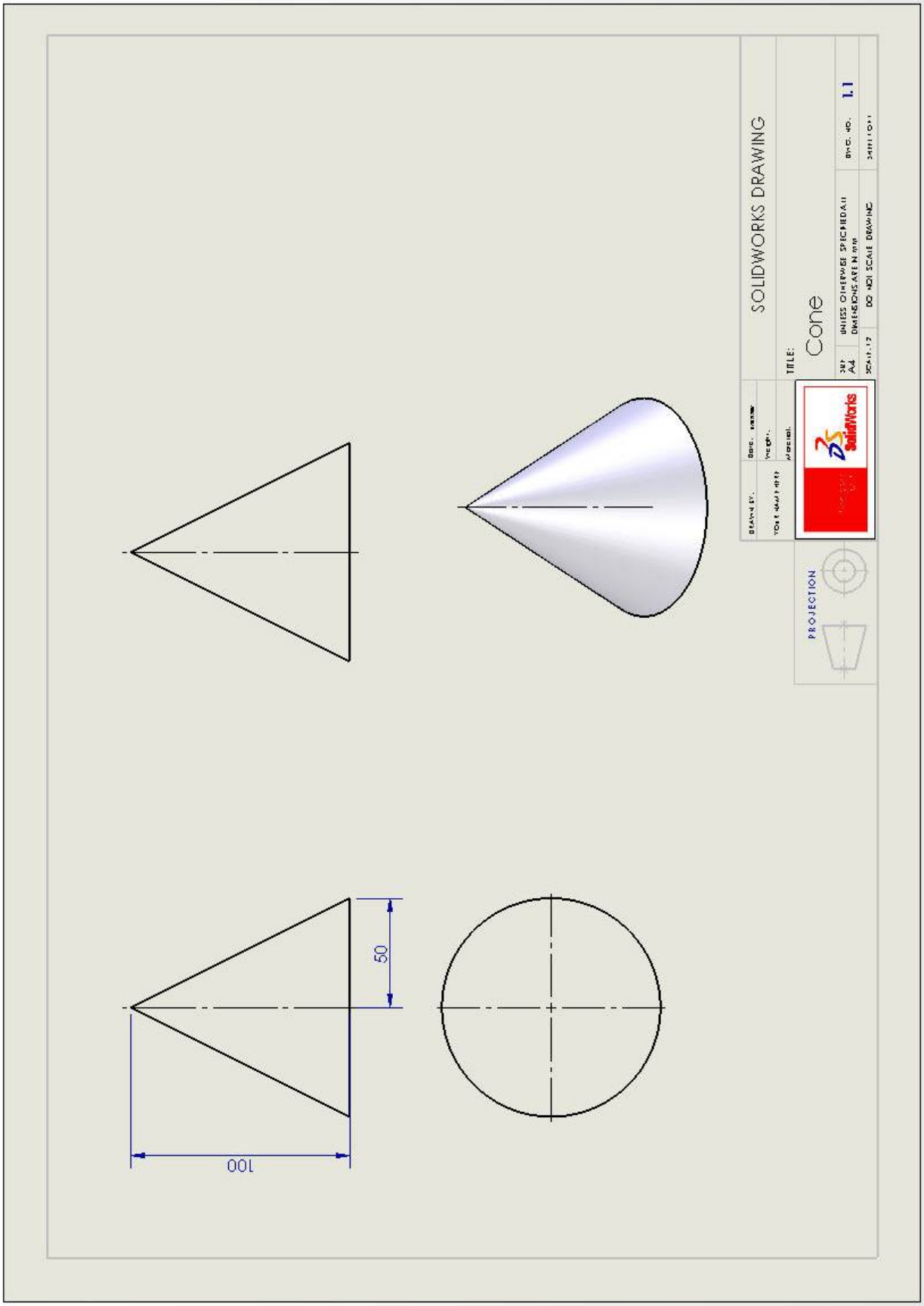
SOLIDWORKS DRAWING
TITLE:
Cone
UNLESS OTHERWISE SPECIFIED ALL DIMENSIONS ARE IN mm
DO NOT SCALE DRAWING
1.1
PROJECTION
50
100

Exercise 10: Sphere.

3.1 Objectives of this Lesson

- Model the Sphere.
- New commands: **Revolve Feature**

3.2 Lesson Outline

- Sketch a Vertical Centre Line on a Plane.
- Create a Semi-Circle using the Centre Point Arc Command.
- Revolve the Sketch around the Centre Line Created.

3.3 Design Intent

- Use Revolve Feature to Create the Part
- The axis of the Sphere should pass through the origin

3.4 Productivity Tip

- The Length of the Centre Line can be of any length

3.5 Modelling Tasks

- Fully define the part using only the given dimensions.

3.6 Create a Drawing

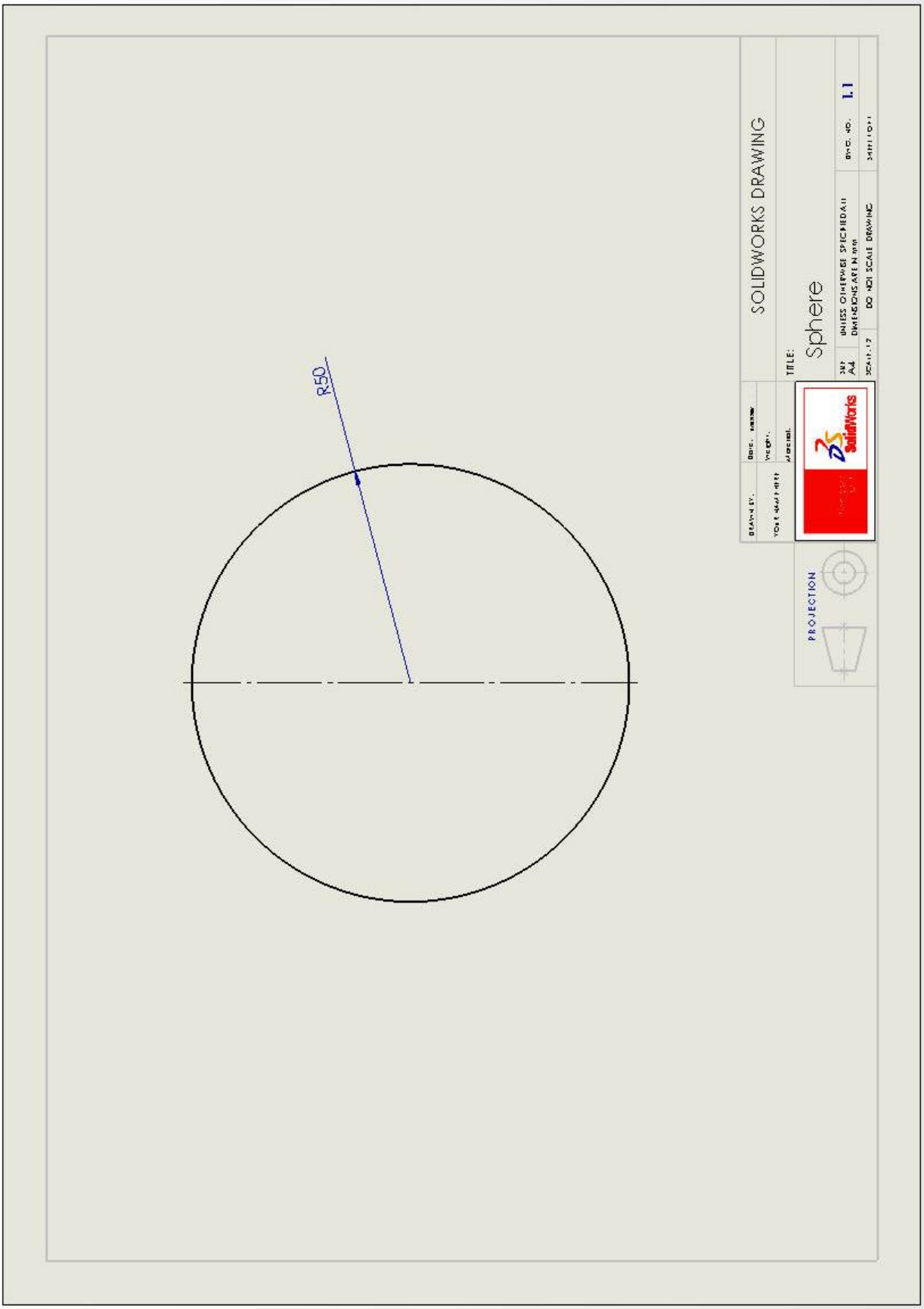
R50
SOLIDWORKS DRAWING
TITLE:
Sphere
SIZE
A4
DWG. NO.
1.1
SCALE: 1:2
DO NOT SCALE DRAWING
PROJECTION

Exercise 4: Pencil

4.1 Objectives of this Lesson

- Model the basic pencil shown here.
- New commands: **Revolved feature, Dome feature.**

4.2 Lesson Outline

- Sketch a polygon profile of the pencil on the front plane with the origin in the centre.
- Fully define the profile using relations/constraints and the given dimensions.
- Extrude the Profile the Full length of the Pencil.
- Use a Revolved Cut to pear the top of the pencil.
- Create the Sketch of the revolved cut on the top profile.
- Use the Dome Feature to create the tip of the pencil.
- Use the Colour palette to give the features different colours.
- Save your model.

4.3 Design Intent

- The axis of the pencil should pass through the origin.
- There should be just three features in your model.

4.4 Productivity Tip

- The sketch profile for the revolved feature cannot cross the axis/centre line.

4.5 Modelling Tasks

- Fully define the vase using only the given dimensions.

4.6 Create a Drawing

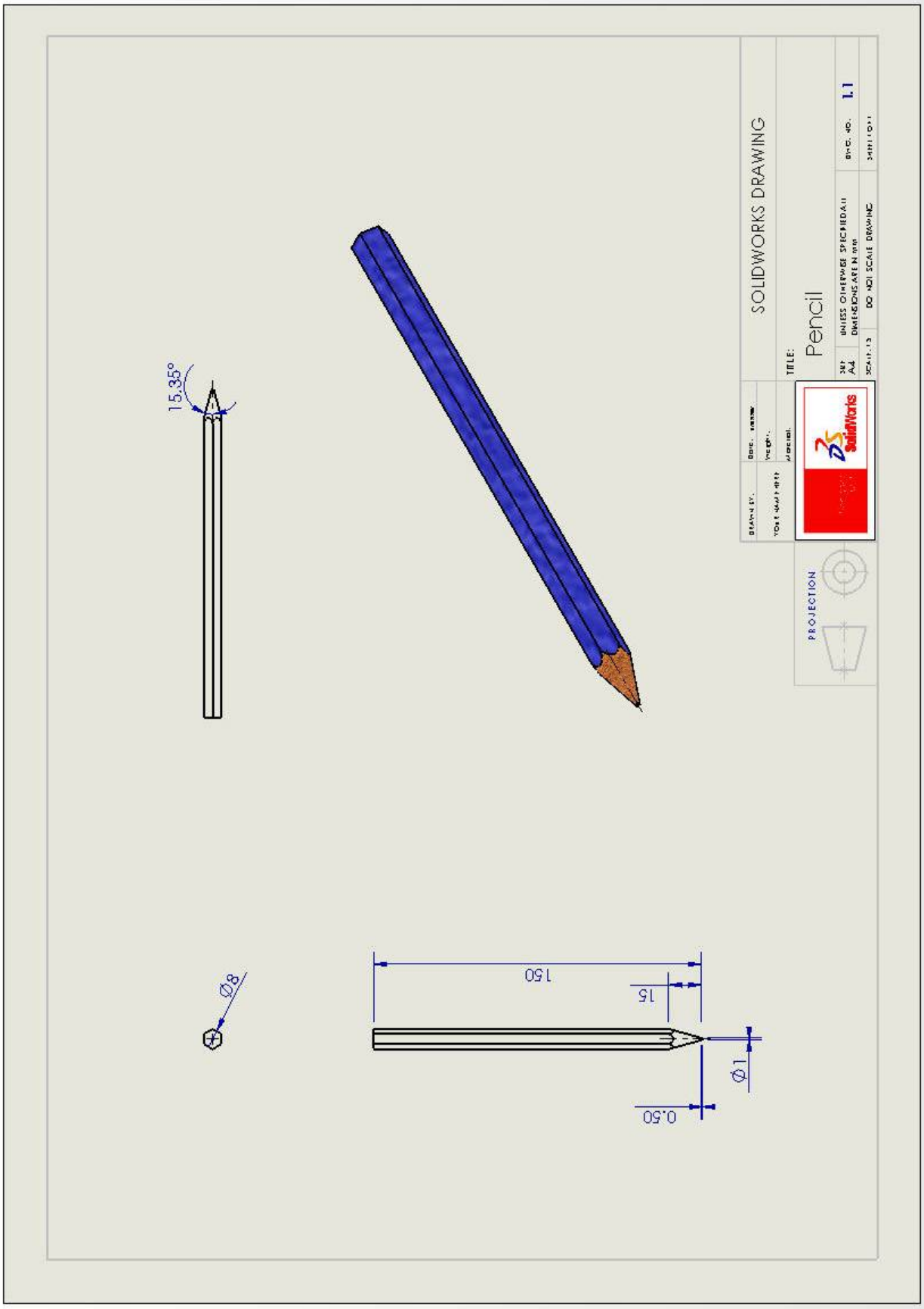
SOLIDWORKS DRAWING
TITLE:
Pencil
A4
UNLESS OTHERWISE SPECIFIED ALL DIMENSIONS ARE IN mm
DO NOT SCALE DRAWING
1.1
PROJECTION
15.35°
Ø8
150
15
Ø1
0.50

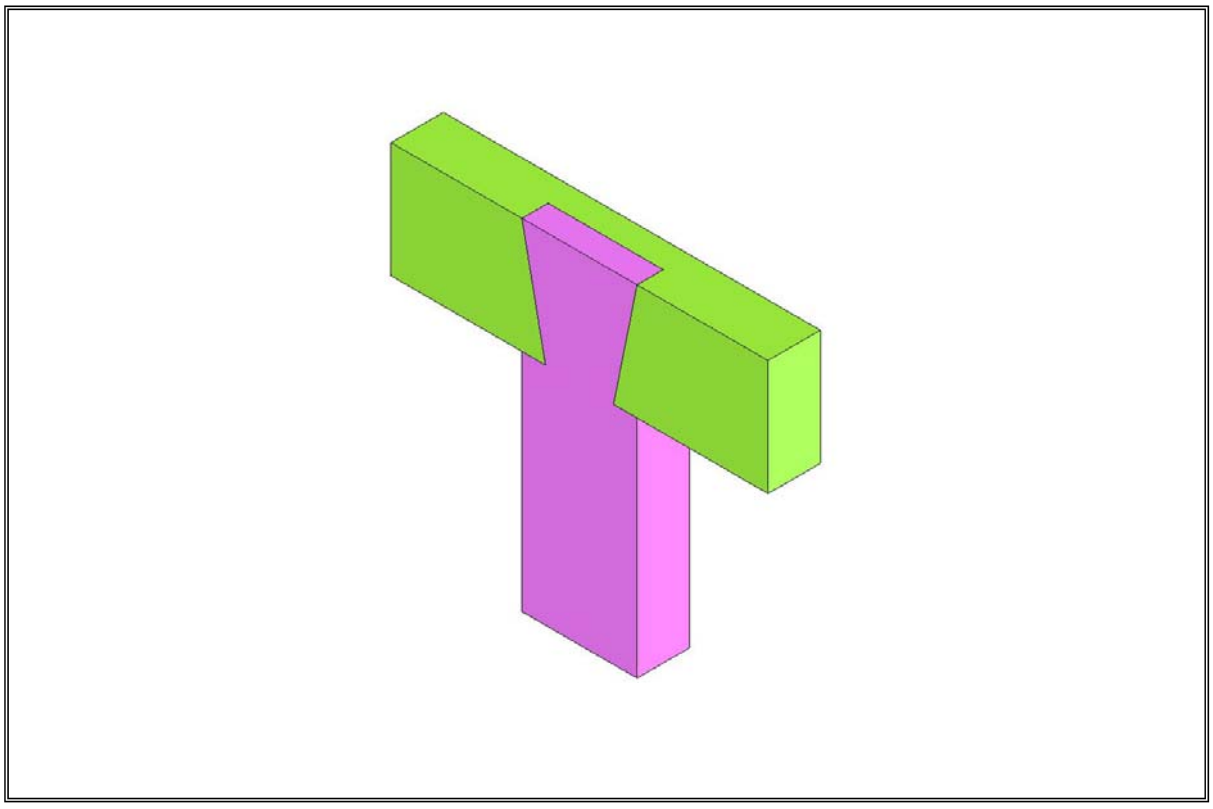

Computer Aided Design – Module 2

Lesson – Tee Dovetail Halving

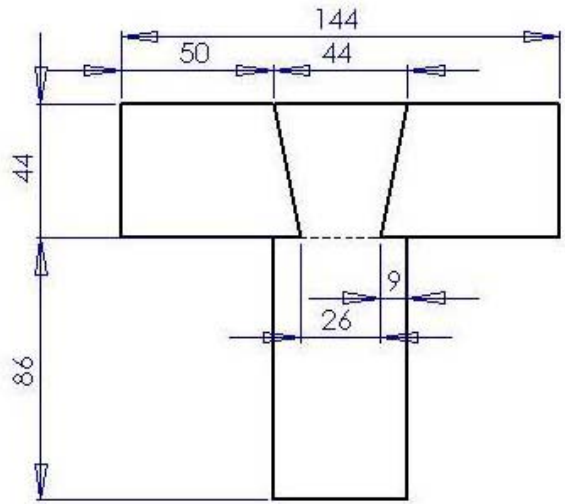

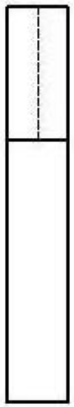

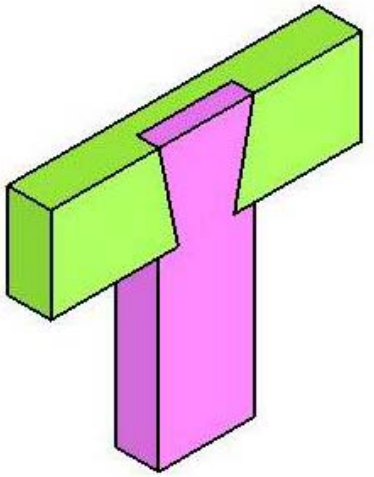

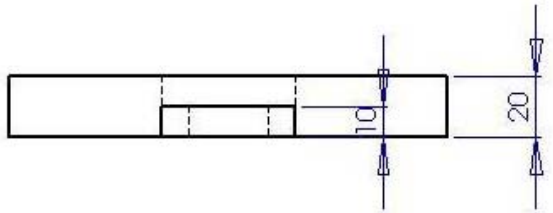

TECHNOLOGY SUBJECTS SUPPORT SERVICE

DESIGN & COMMUNICATION GRAPHICS

TITLE:

Dovetail Halving Assembled

DRAWN BY: YOUR NAME HERE

SIZE A4

UNLESS OTHERWISE SPECIFIED ALL DIMENSIONS ARE IN mm

SCALE: 1:1

DATE: 17/10/2007

SHEET 1 OF 1

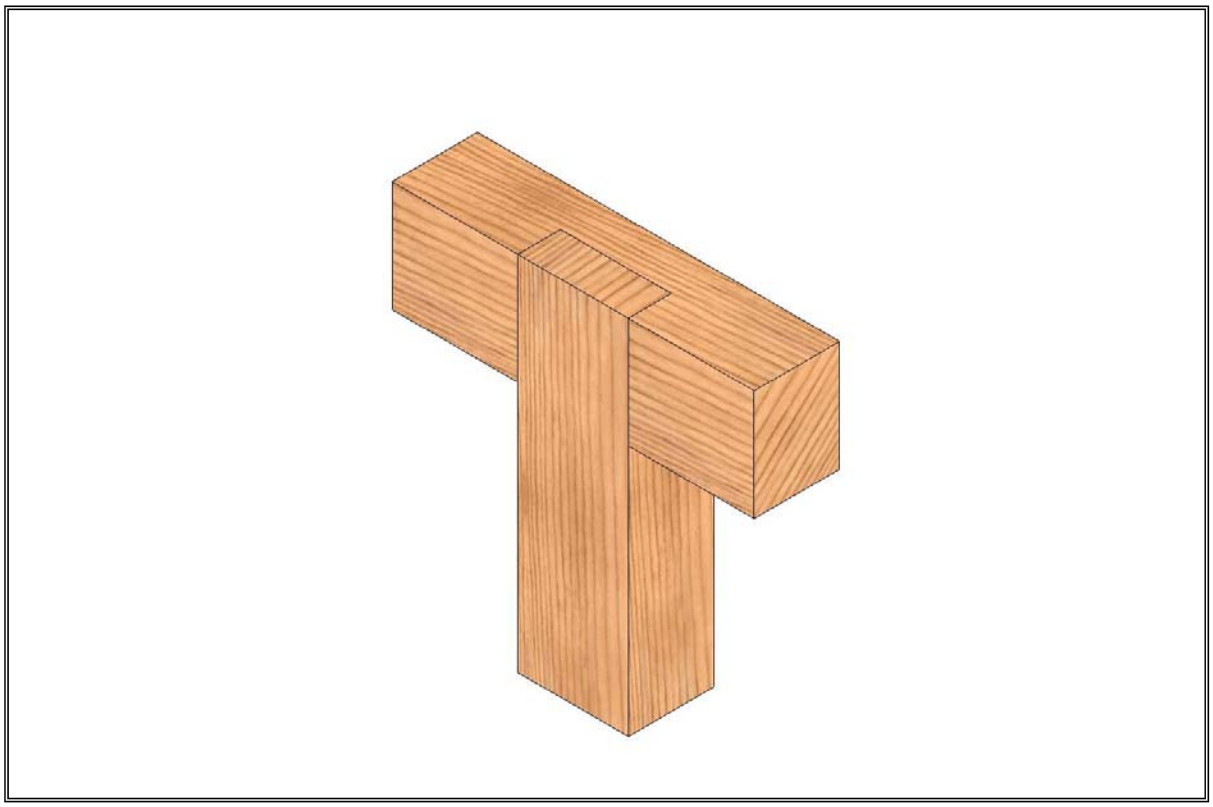

Computer Aided Design – Module 2

Lesson – Tee Halving

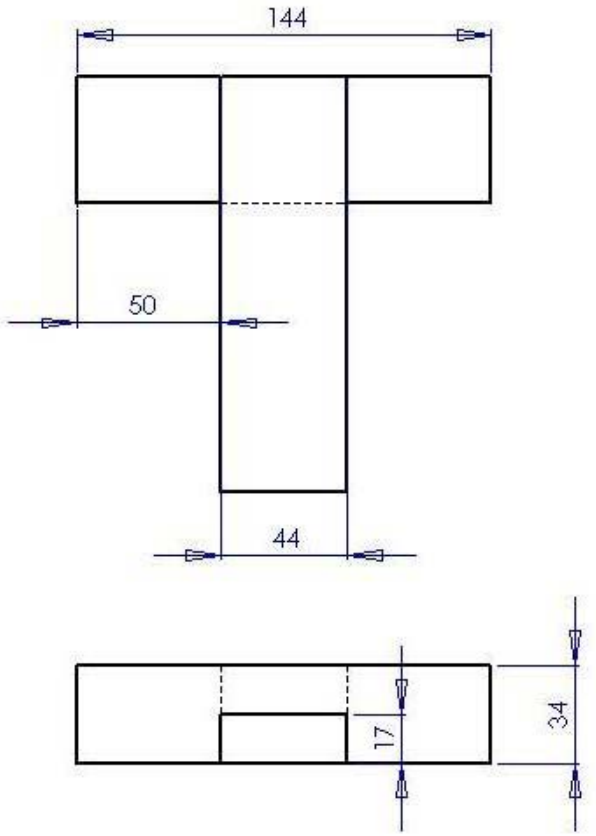

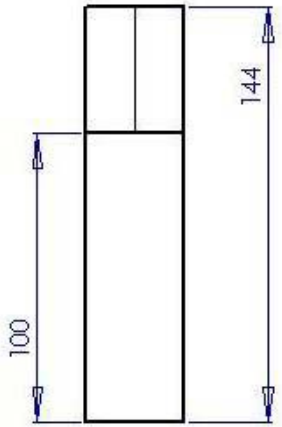

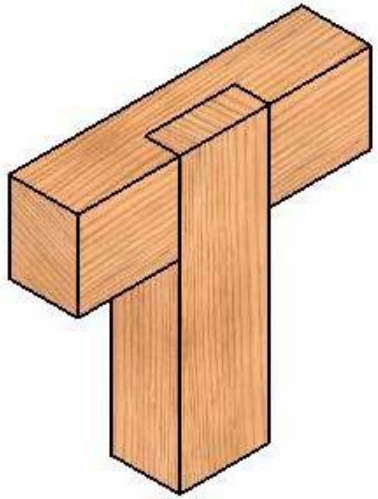

TECHNOLOGY SUBJECTS

DESIGN & COMMUNICATION GRAPHICS

TITLE:

t hal ass

DRAWN BY: YOUR NAME HERE

SIZE A4

UNLESS OTHERWISE SPECIFIED ALL DIMENSIONS ARE IN mm

SCALE: 1:5

Date: 17/10/2007

SHEET 1 OF 1

Computer Aided Design – Module 2

Lesson – Whistle

Lesson – Whistle

Commands used: **Sketch Circle, Line, Rectangle, Centre Arc, Trim, Add Relation, Mirror sketch, Smart dimension, Extruded Boss/Base, Cut Extrude, Revolved Boss/Boss, Fillet, Shell,** & **Edit Material**

Approach to Lesson:

Create sketch for the body of the whistle

Create the sketch on the **Front Plane** using the Circle and Line sketch commands.

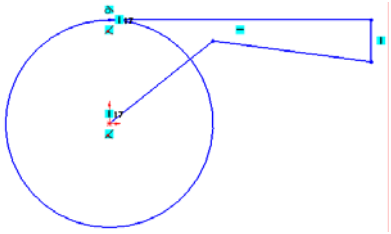

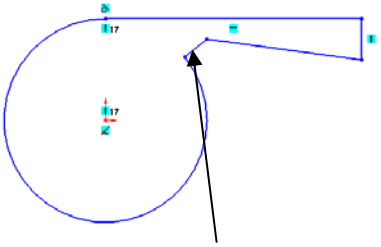

Use **Trim** to remove arc and line.

Make this line and the Origin **Coincident** by using **Add Relation**

Use **Smart Dimension** to dimension the sketch

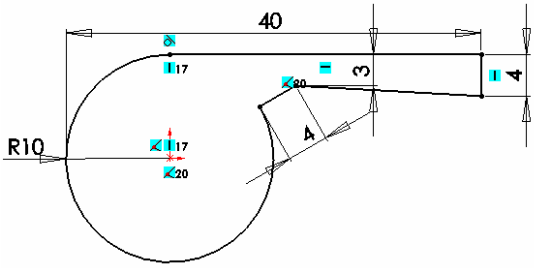

Whistle body

Extrude the sketch using **Extruded Boss/Base**
Select **Mid Plane** as the end condition and a distance of 18mm.

Rename the feature as 'Whistle Body'.

First cut to mouth of the whistle

Create one half of the sketch on the top surface of the whistle using the **Line** command. Sketch the a **Centreline** and **Mirror** three lines about the centreline to create the other half. **Smart Dimension** the sketch.

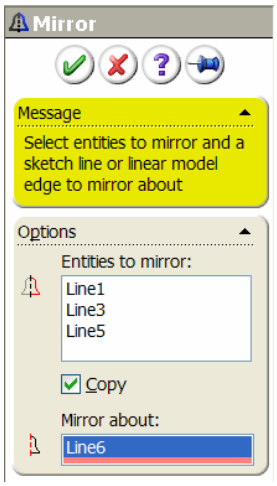

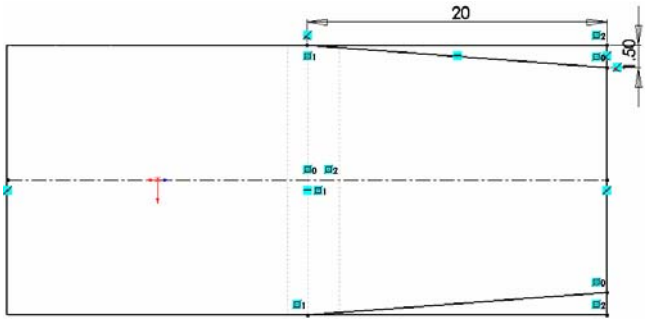

Cut Extrude

Cut Extrude using this sketch. Select **Up to Next** as the end condition. Rename the feature as 'First cut'

Second cut to mouth of whistle

Create sketch on the top surface of the whistle using **Centreline** and **Centre Arc.**

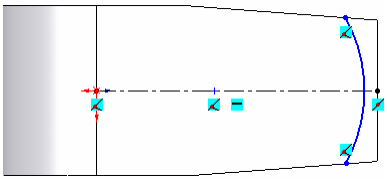

Make the arc tangential to the right hand edge by using **Add Relation**

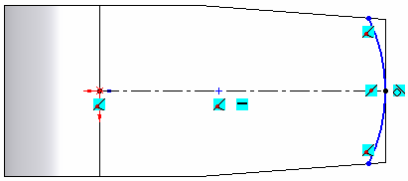

Smart Dimension.

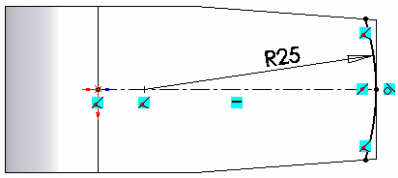

Cut Extrude

Cut Extrude using this sketch (line). **Through All** is the automatic end condition. Ensure the direction is pointing away from the body of the whistle

Rename the feature as 'Second cut'.

Apply fillet to top edges

Apply a 1mm fillet to the top edges of the whistle.
Rename the feature as 'Top fillet'

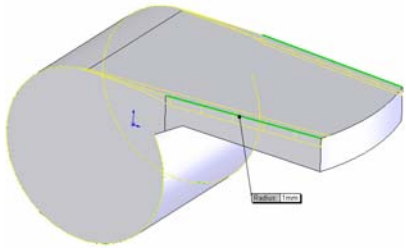

Raised area for ring attachment

Create the sketch below on the **Front Plane** using **Line**, **Add Relation** and **Smart Dimension.**

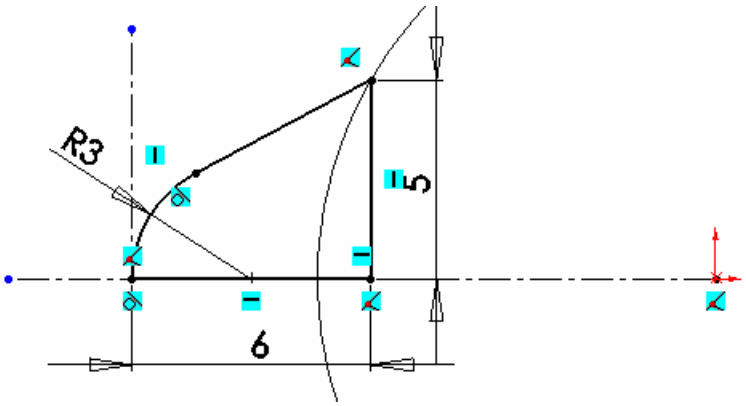

Revolved Boss/Base to raised area

Use **Revolved Boss/Base** to create the area.

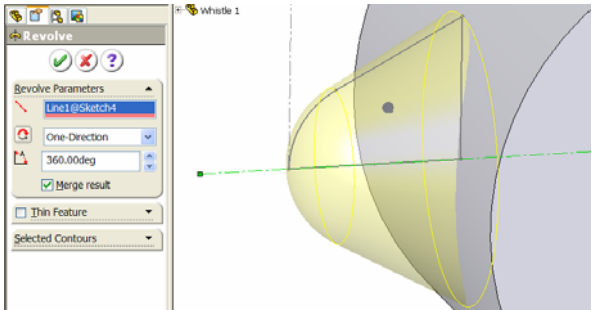

Rename the feature as ‘Raised area’.

Shell

Shell the whistle with a wall thickness of .5mm. Remove one face.

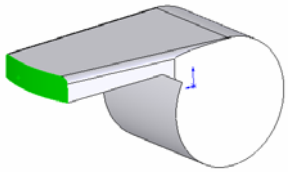

Rename the feature as ‘Shelling of whistle’.

Opening

Create sketch on the top surface of the whistle using a **Rectangle**

Smart Dimension

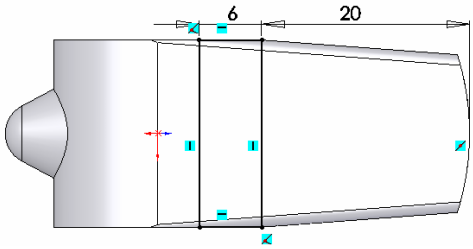

Extrude Cut with this sketch to create the opening. Select **Up to Surface** as the end condition and select the inside surface.

Rename the feature as ‘Opening’.

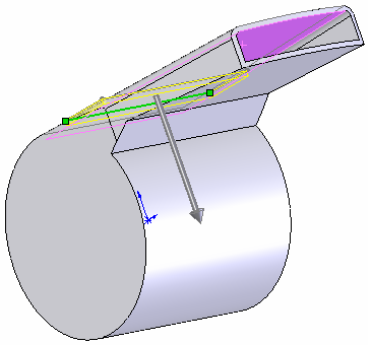

Hole

Create the sketch on the front plane

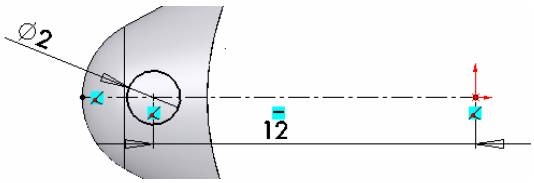

Extrude Cut with this sketch to create the hole. Select **Mid Plane** as the end condition and a distance of 10m

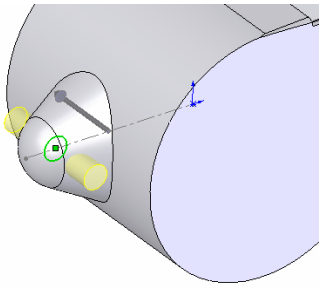

Rename as ‘Hole’.

Edit Material

Apply a **Chrome Stainless Steel** finish using **Edit Material**

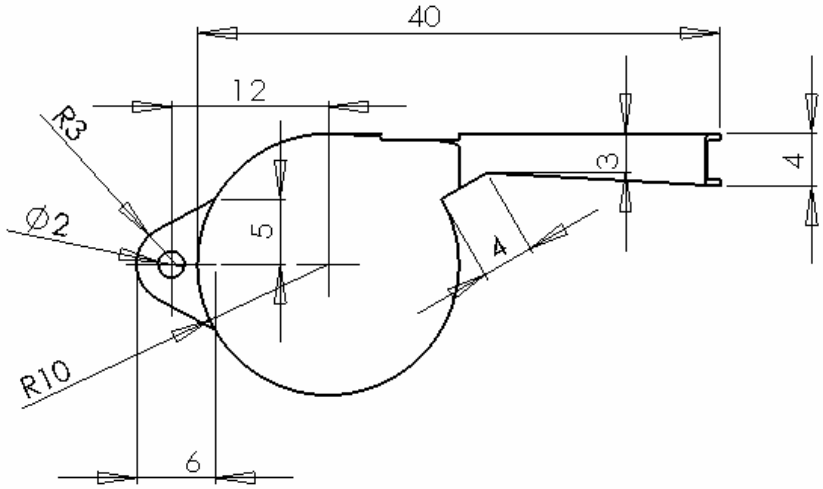

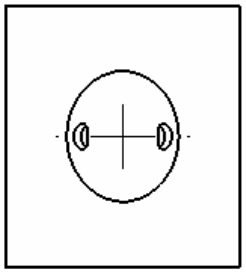

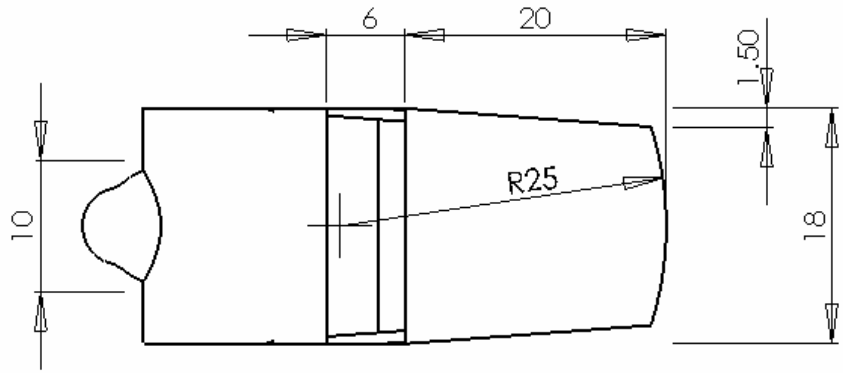

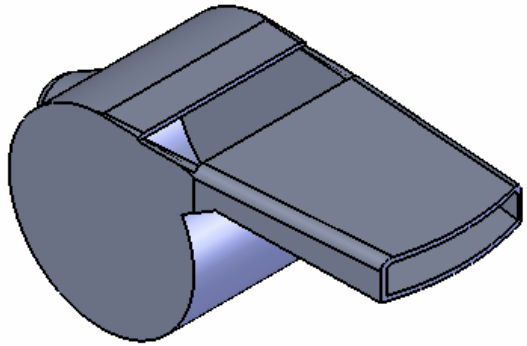

TECHNOLOGY SUBJECTS SUPPORT SERVICE

DESIGN & COMMUNICATION GRAPHICS

TITLE: Whistle

DRAWN BY: YOUR NAME HERE | SIZE A4 | UNLESS OTHERWISE SPECIFIED ALL DIMENSIONS ARE IN mm

SCALE: 1:1 | Date: 16/10/2007 | SHEET 1 OF 1