Introduction to Circular Pattern – Flower Pot

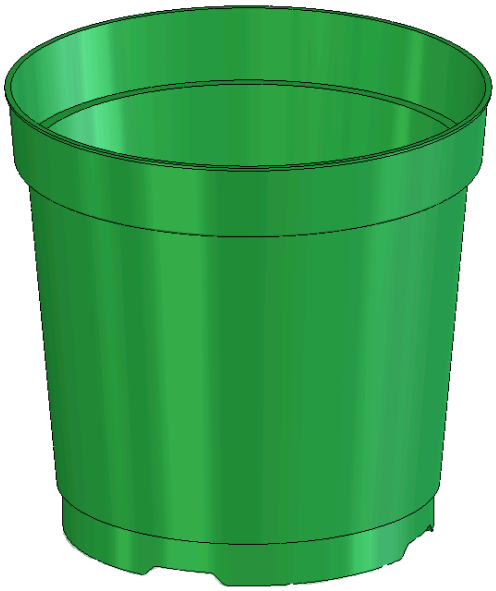

Prerequisite Knowledge

Previous knowledge of the sketching commands **Line, Circle, Add Relations, Smart Dimension** is required to complete this lesson. Previous examples of **Revolved Boss/Base, Cut Extrude, Chamfer, Fillet, Shell** and **Adding Appearance** should also have been completed.

Focus of the Lesson

On completion of this lesson you will have used:

- The **Line, Centerline, Circle, 3 Point Circle, Add Relation, Convert Entities** and **Smart Dimension** commands from the **Sketch Toolbar**.
- The **Revolved Boss/Base, Cut Extrude, Chamfer, Fillet, Shell** and **Circular Pattern** commands from the **Features Toolbar**.

Circular Pattern is used when spacing multiple instances of one or more features around an axis. The pattern will be created on the same face of the model as the initial feature to be patterned. This is called the **Seed Feature**.

The Property Manager of the Circular Pattern controls the layout of the pattern. To create the pattern an axis must be chosen to revolve around. Other parameters to be set include the degrees of revolution, the number of instances and whether these will be equally spaced. The pattern can be modified to allow certain instances of the patterned feature to be skipped.

Commands Used

This lesson includes **Sketching (Line, Circle, Centerline, Add Relations, Convert Entities and Smart Dimension), Revolved Boss/Base, Cut Extrude, Chamfer, Fillet, Shell,** ***Circular Pattern*** and **Add Appearance**.

Where to start?

It is important to analyse the design of a flower pot prior to starting the model. The model is created by revolving a sketch so that the axis for the feature will provide the axis for the circular patterns on the base.

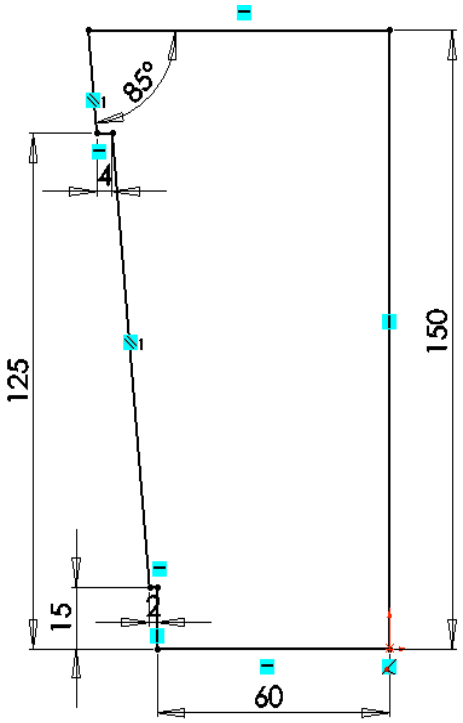

Sketch to generate feature

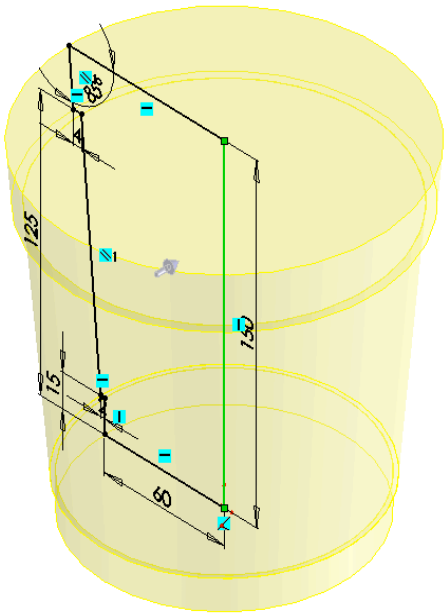

Revolved feature

Getting started

Create a new part. Save the part as ***Flower Pot*** in your chosen location.

Choosing a plane

Left click on the Front plane in the FeatureManager tree and choose **Sketch**

The view will automatically change to a front view.

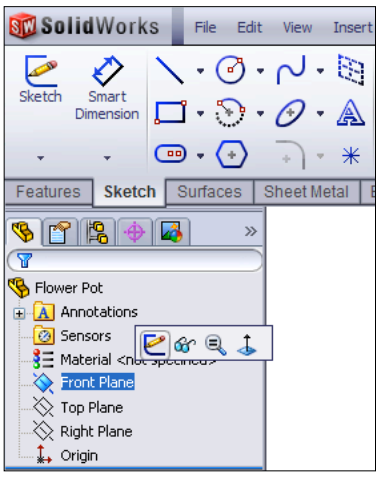

When creating a sketch, the following sequence is considered good practice:

Sketch – Add Relations – Add Dimensions – Fully Defined Sketch

Creating a sketch

Click the **Sketch** tab from the CommandManager.

Select the **Line** command.

From the origin create a sketch similar to the one below.

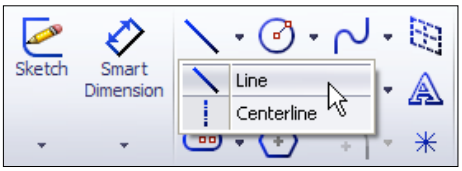

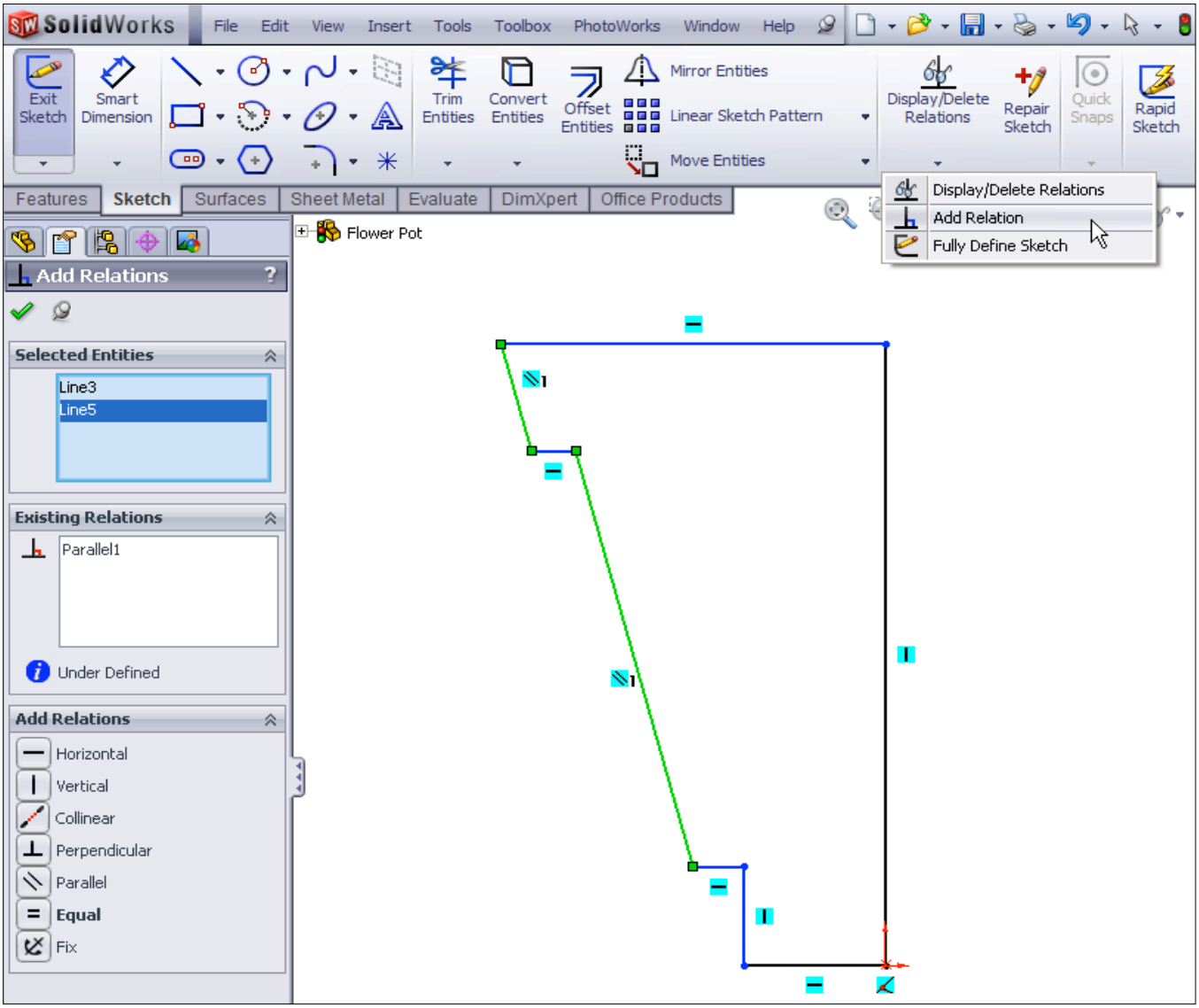

Adding Relations

Select the **Add Relation** icon from the **Display/Delete Relations** tool to display The Add Relations PropertyManager

Select the two lines indicated (in green) and choose *Parallel* in the Add Relations property manager. Click **OK** from the PropertyManager. The parallel relation is added.

Add Dimensions Select **Smart Dimension** from the sketch toolbar and dimension the sketch as shown across.

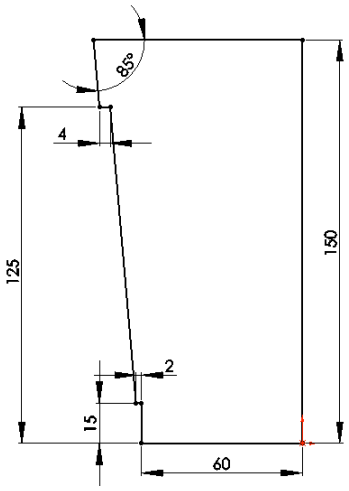

Note – The sketch will change from blue to black when it is **fully defined**.

Confirm the sketch.

Creating the feature

Click the **Features** tab from the CommandManager to display the Features toolbar.

Select the **Revolved Boss/Base** tool to display the Revolve PropertyManager.

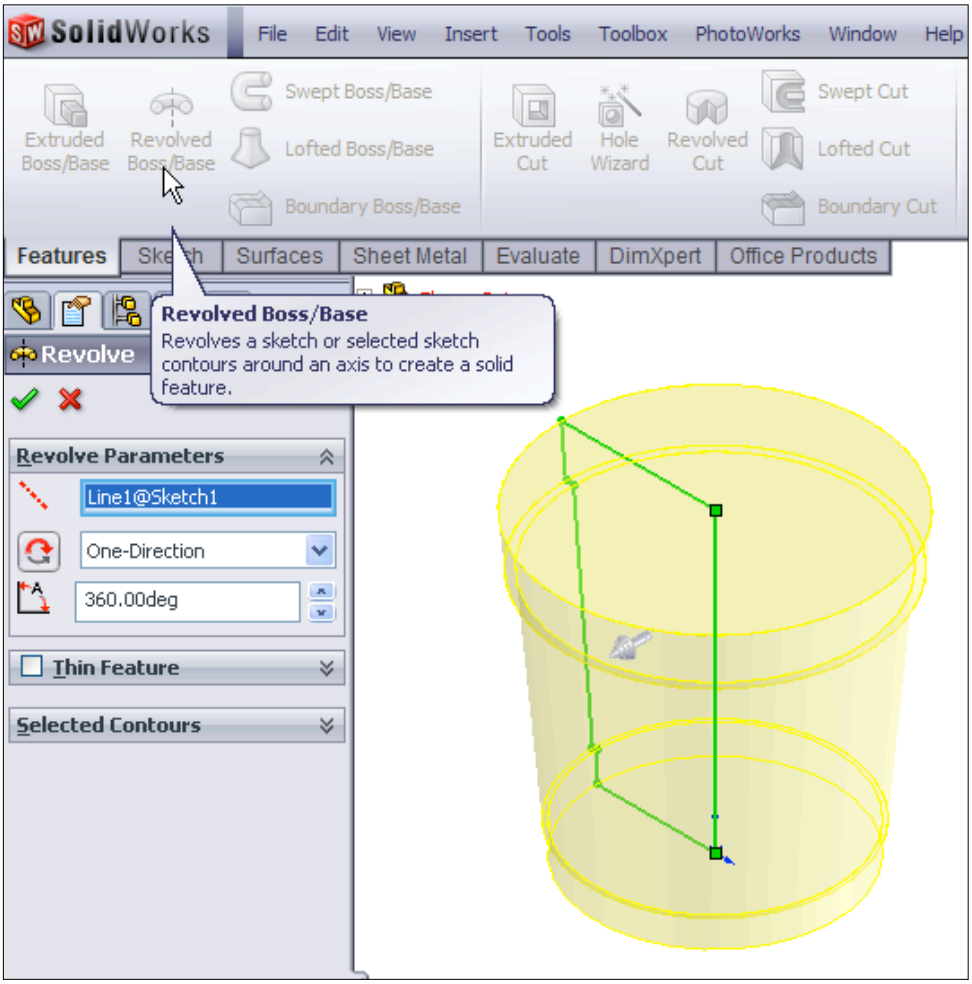

The sketch rotates to a trimetric view. In the **Revolved Boss/Base** Propertymanager select the 150mm vertical edge of the sketch as the axis for the revolution. At this point a preview of the feature will appear.

Click **OK** *button* to create the feature.

Completed feature: This is the first completed feature of the part. The sketch has been absorbed into the *Revolve1* feature in the **Feature Manager.**

Renaming a feature: Select Revolve1 **in the Feature Manager Tree**, press the F2 key and type the new name *Main Body* to replace "Revolve1".

Creating the indents on the base

Creating the sketch Rotate the model so that the bottom surface is visible. Right-click the **bottom face** of the main body. The bottom face is the Sketch plane and is highlighted in the Graphics area. Click the **Sketch** tool from the Context toolbar. Choose **Normal to** from the heads up toolbar.

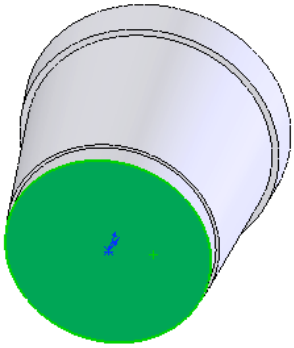

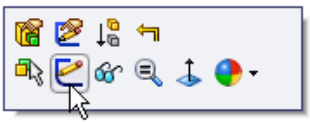

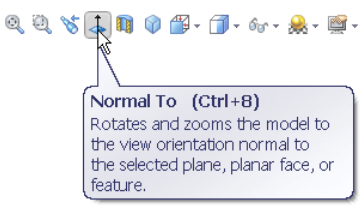

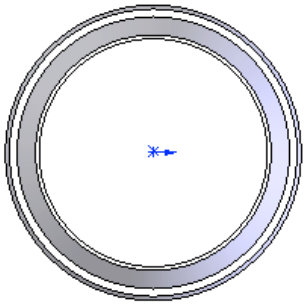

Select the **Centerline** Sketch command. Draw a vertical centreline on the sketch plane from the centre.

Click the **Line** tool and start a vertical line capturing a **Coincident** relation at the circular edge.

Press the letter **A** on the keyboard to access tangent arc mode.

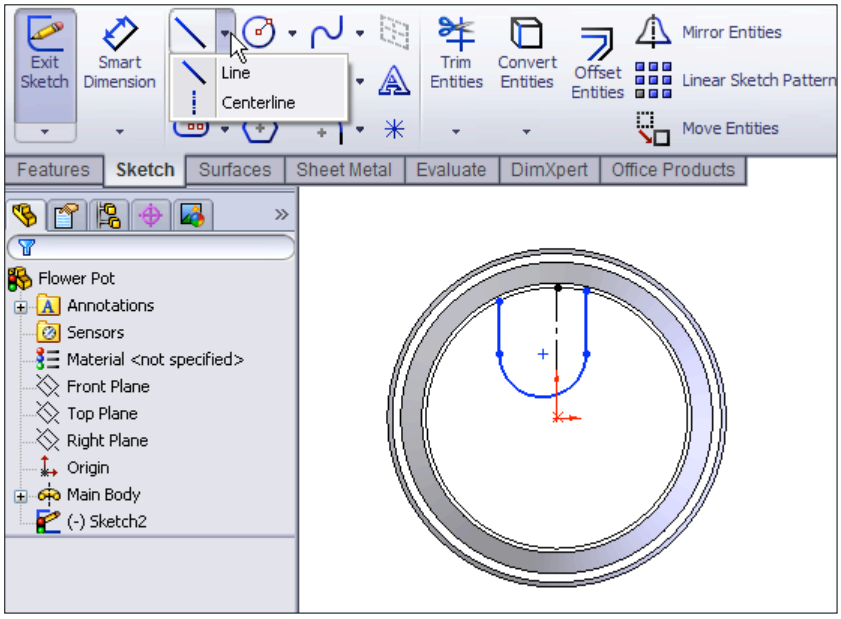

Draw a semi-circle. Click to complete the semi-circle and the software changes back to the Line command. Draw a second line parallel to the first.

Select the circular edge of the base. Select the **Convert entities** command to convert this circle to a circle within the sketch.

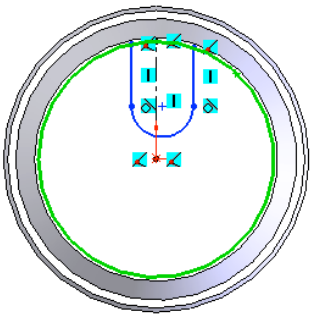

Use the Trim Entities command to trim the circle to the required size.

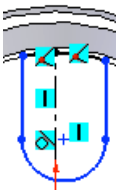

Select the **Add Relation** command. Select the centerline and the centre point of the semi-circle and in the **Add Relation** Property Manager make them coincident.

Using **Smart Dimension** apply the above dimensions to the circle.

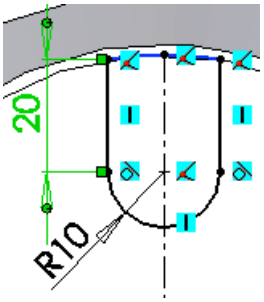

Confirm the dimensions and exit the sketch.

Creating the feature

Click the **Features** tab from the CommandManager to display the Features toolbar.
Select the **Extruded Cut** tool to display the **Extrude** PropertyManager**.**
Choose **Isometric** from the **Heads-up View toolbar**.

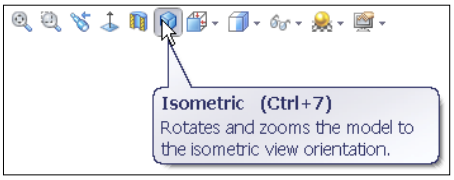

The feature previews in isometric.

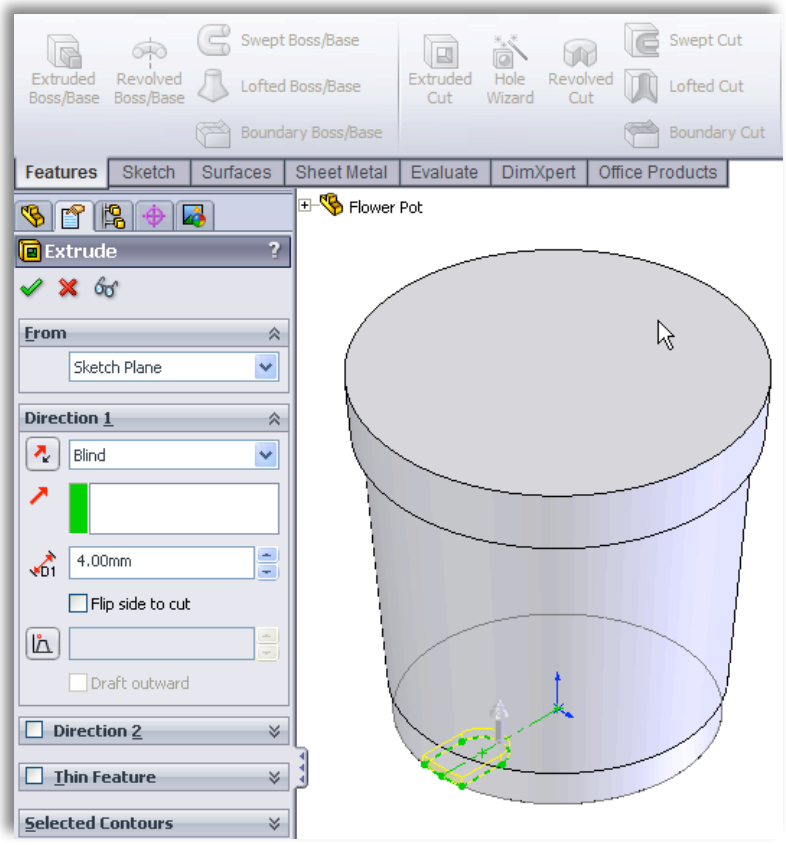

Extrude Feature Settings:

End Condition = **Blind**

Depth = **4mm**

Click the **OK** button to create the feature.

Rename the feature *Base Cut*.

Adding a Chamfer A 4 mm chamfer will now be added to the top edge of the Base Cut.

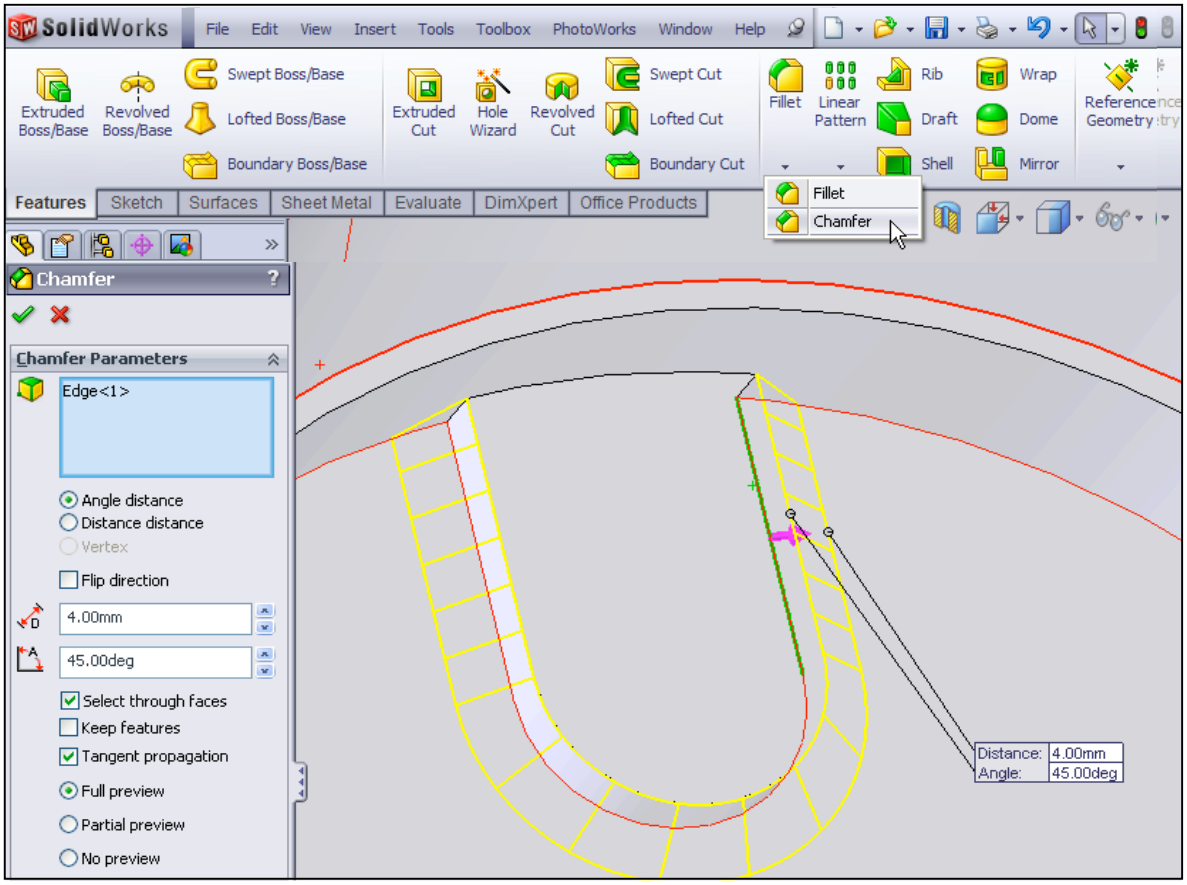

Rotate the model to view the base cut. Select Chamfer from the Features toolbar.

In the Chamfer Property Manager select the top edge of the extruded cut in the graphics area and insert the parameters as shown.

Note: The flip direction check box will angle the chamfer inwards.

Confirm the feature.

Adding a Fillet A fillet will now be added to the top and bottom edges of the chamfer.

Select Fillet in the Features Toolbar.

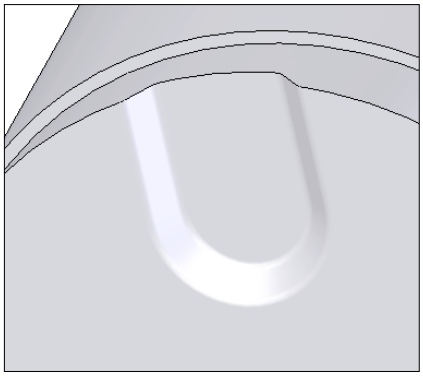

In the Fillet Property Manager set the Fillet radius to 2mm and the select the top and bottom edges of the chamfered cut in the graphics area.

Confirm the feature.

The completed feature should now look like this (above).

Pattern the Feature The **Base Cut** can now be patterned on the bottom surface of the model.

In the View menu activate the Temporary Axes. The axis from the original Revolved Boss/Base will become visible.

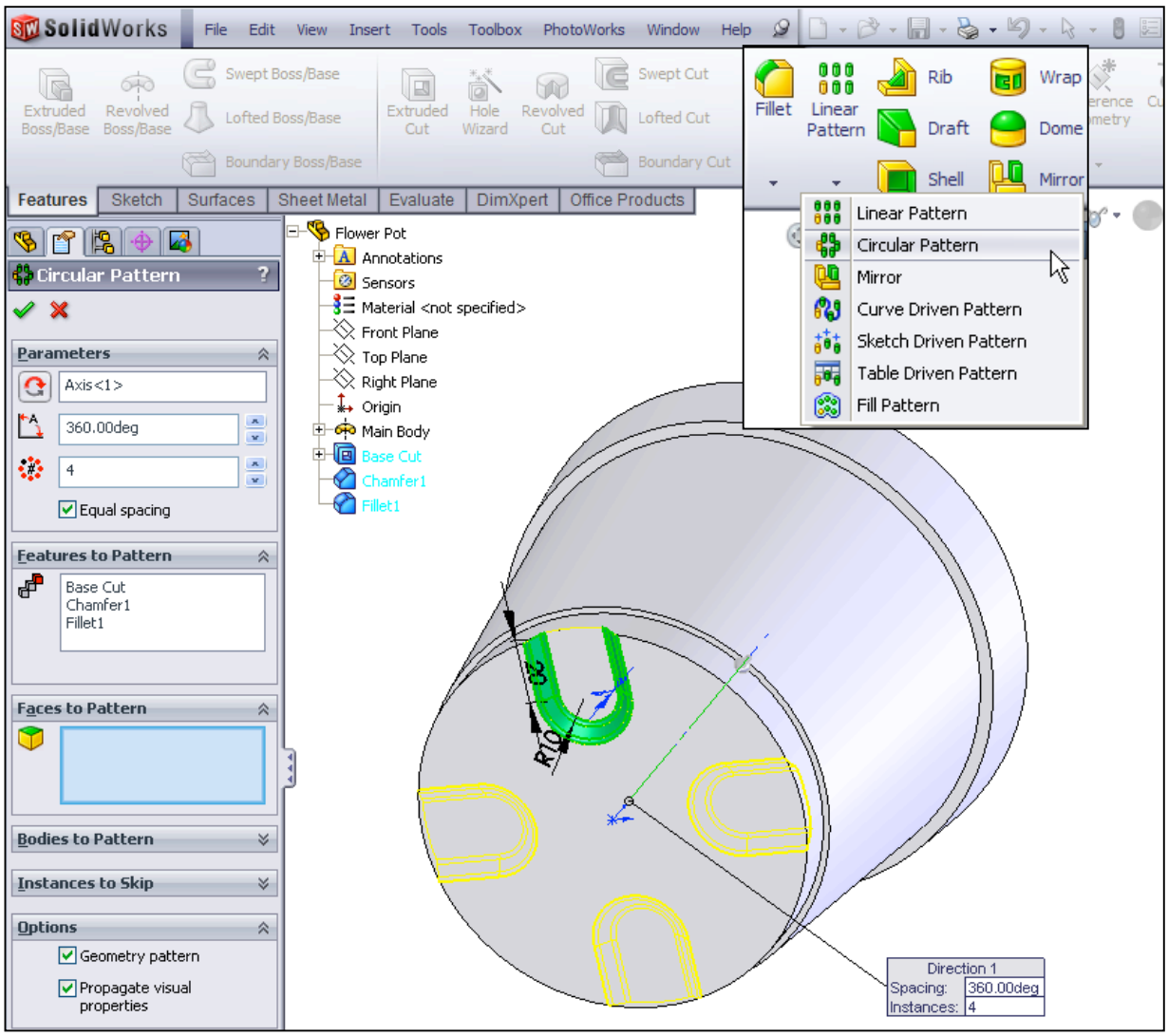

Choose the **Circular Pattern** Command from the features toolbar.

In the **Circular Pattern Property Manager** select the visible axis, instances (4) with equal spacing.

Expand the Feature Tree of the Flower Pot (left click on the + sign) in the graphics area and select **Base Cut, Chamfer1 and Fillet1** as the **Seed Features** to pattern.

Click **OK** to create the pattern.

Rename Feature Rename the feature **Base Pattern**

Shell Command It is important to shell after the cut feature on the base has been patterned. If the shell was created first the 4mm deep indents could not have been created in a shelled feature 1mm thick.

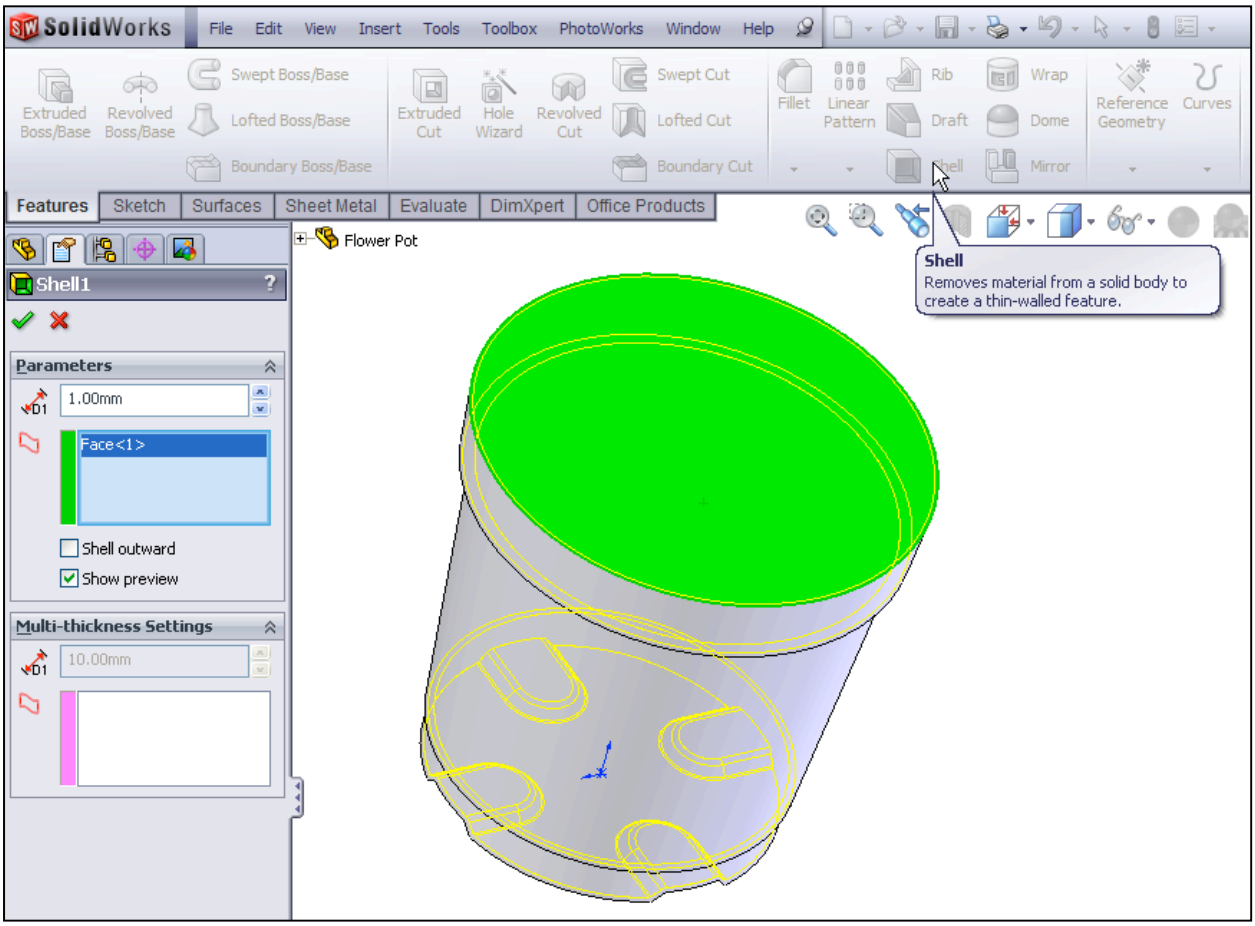

Select the Shell command on the Features toolbar.

In the Shell Property Manager

- Distance = 1mm
- Select the top surface of the model.
- Tick **Show Preview**

Click **OK** button to create the pattern.

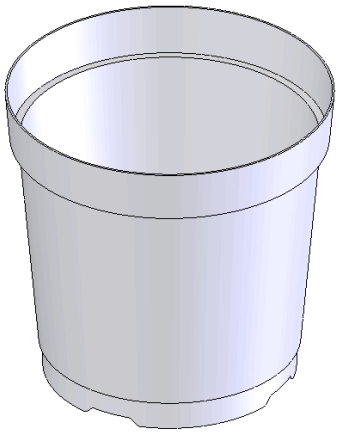

Rename Feature Select the Feature in the Feature Manager Tree and press the F2 key. Rename the feature Base Cut Pattern.

This is how the completed shell feature should look.

Creating the holes A circular hole is created first on the base and then patterned.

Creating the Sketch Click the **Sketch** tab from the CommandManager. The Sketch toolbar is displayed.

Rotate the model to view the bottom surface. Left click on the surface and select **Sketch**. Choose **Normal To** from the **Heads-up View toolbar**.

Select the **Centerline** Sketch command. Sketch two centerlines from the centre of the circle to the circumference of the base circle. **Add Relations** to make one horizontal and **Smart Dimension** the angle between them to 45^0.

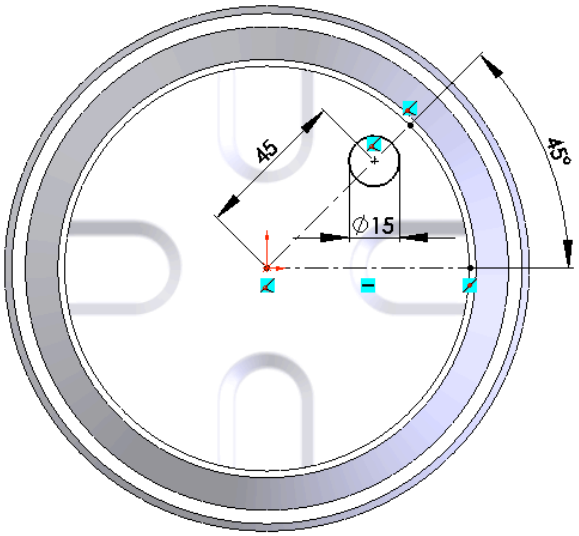

Select the **Circle Command**. Sketch a circle centred on the centerline and Smart Dimension as shown.

Click **OK** to complete the sketch.

Finish the sketch by clicking on the **Exit Sketch** icon or Exit Sketch in the **Confirmation Corner**.

Creating the Feature

Click the **Features** tab from the CommandManager. The Features toolbar is displayed. Select the **Extruded Cut** tool. The **Extrude** PropertyManager is displayed**.** Choose **Isometric** from the **Heads-up View toolbar**.

In the **Cut Extrude Feature Manager** set the direction to *Through All*.

Click **OK** to complete the feature.

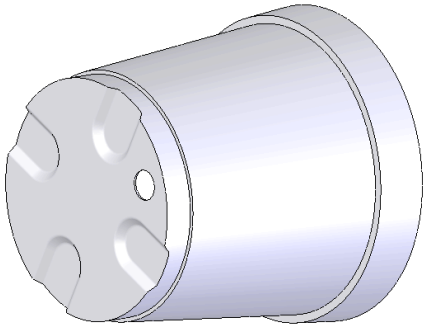

Rename the feature Circular Hole in the **Feature Tree Manager** (F2 key).

Pattern the Feature The Circular Hole feature can now be patterned with similar settings as the previous **Circular Pattern**.

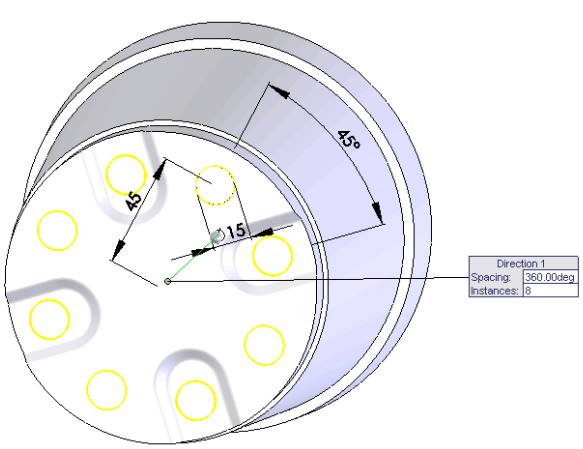

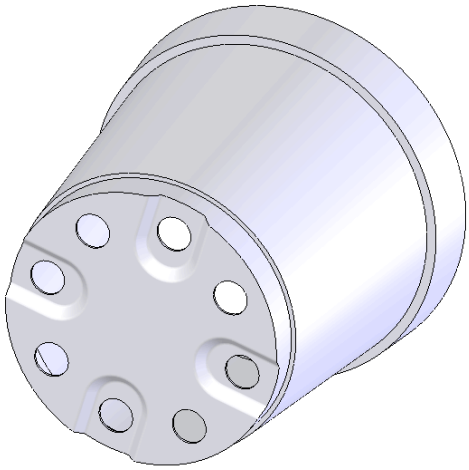

Select the same axis as previously; instances (8) with equal spacing (above left).

Expand the Feature Tree in the graphics area and select **Circular Hole** as the feature to pattern.

In the **Options** box, deselect **Geometry Pattern**.

Click **OK** to complete the feature.

The model should now look like this (above right).

Rename the Feature In the Feature Manager Tree rename the pattern *Base Circles Pattern*.

Note: It is advisable to save the part at regular intervals. This can done using the Quick save button.

Adding an edge A protruding edge is added to top of the Flower Pot. Sketch the profile below on the Right plane. Zoom to the top corner. The graphics area will enlarge the selected area.

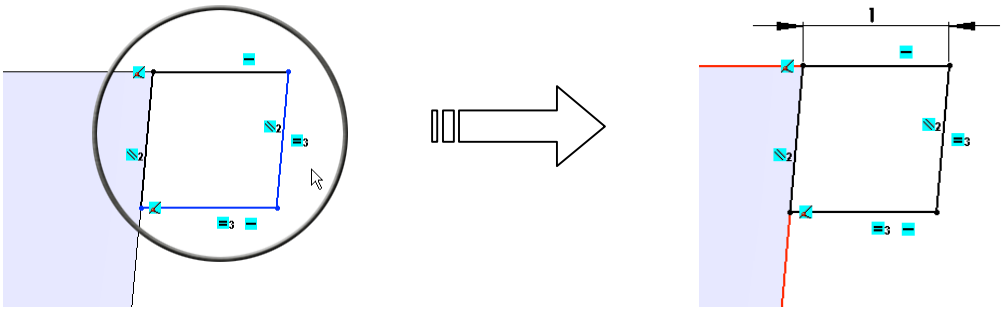

Select the Line command and sketch the diagram above. Add **Parallel** and **Equal** relations as shown (above left). Smart Dimension as shown (above right).

Creating the feature

Click the **Features** tab from the CommandManager.

Select the **Revolved Boss/Base** tool. The Revolve PropertyManager is displayed

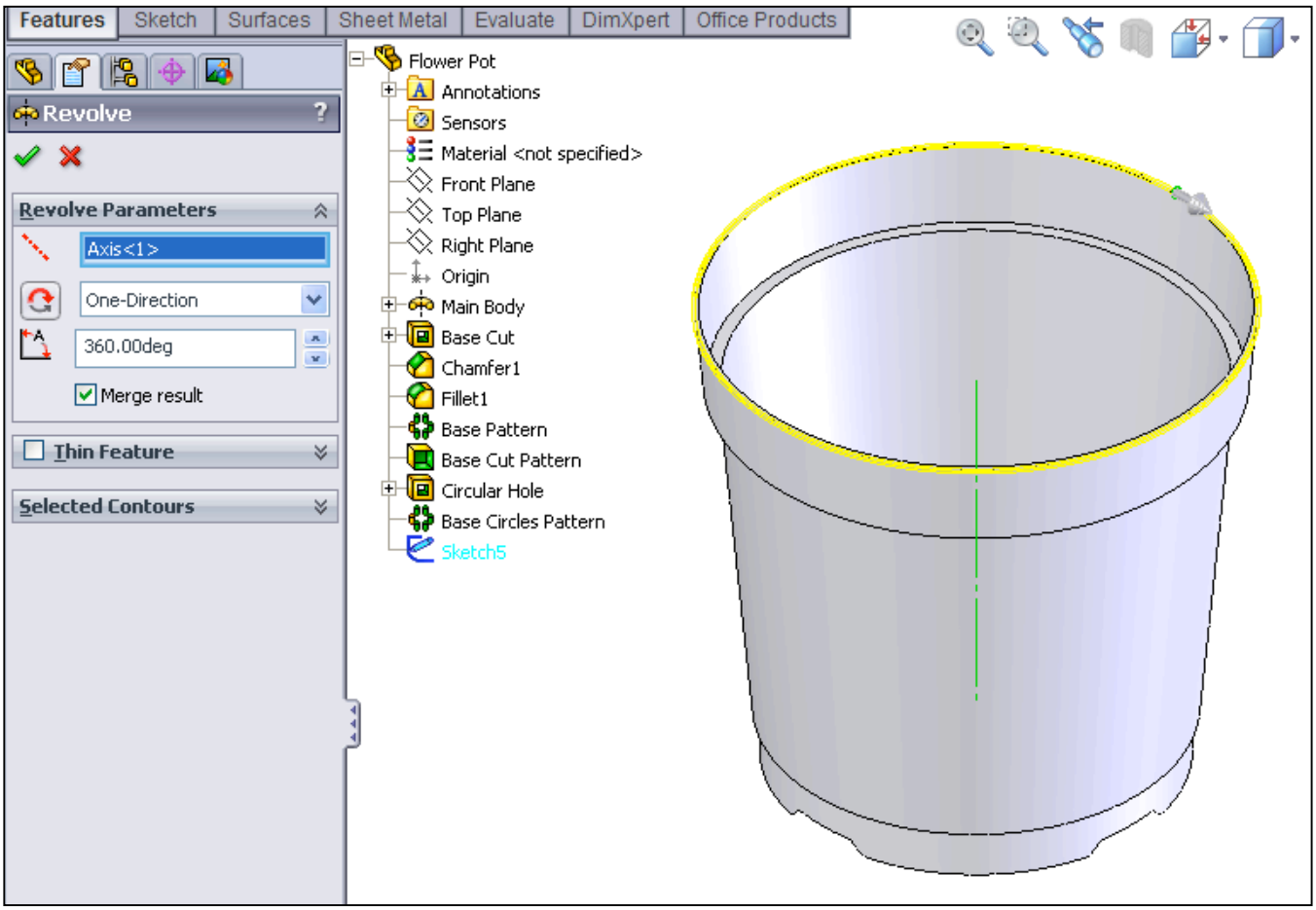

In the **Revolved Boss/Base** feature Propertymanager select the axis of the cylinder as the axis for the revolution. At this point a preview of the feature will appear.

Click **OK** button to create the feature.

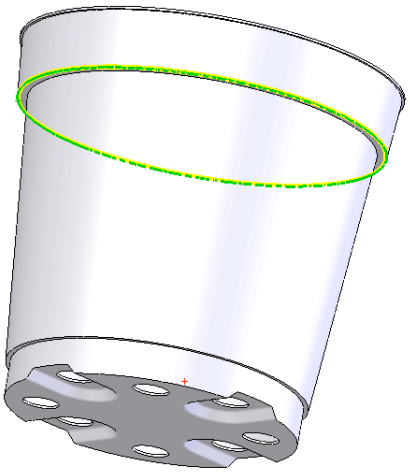

Rename the feature Rim.

One last Fillet

Add a 1mm fillet feature to the underside surface of the external rim.

Adding an appearance to the Flower Pot.

Right click on any face of the model and choose **Appearance C ut**

A drop-down menu appears with the various aspects of the model in hierarchical order.

Click on the colour swatch next to the part name, Flower Pot.

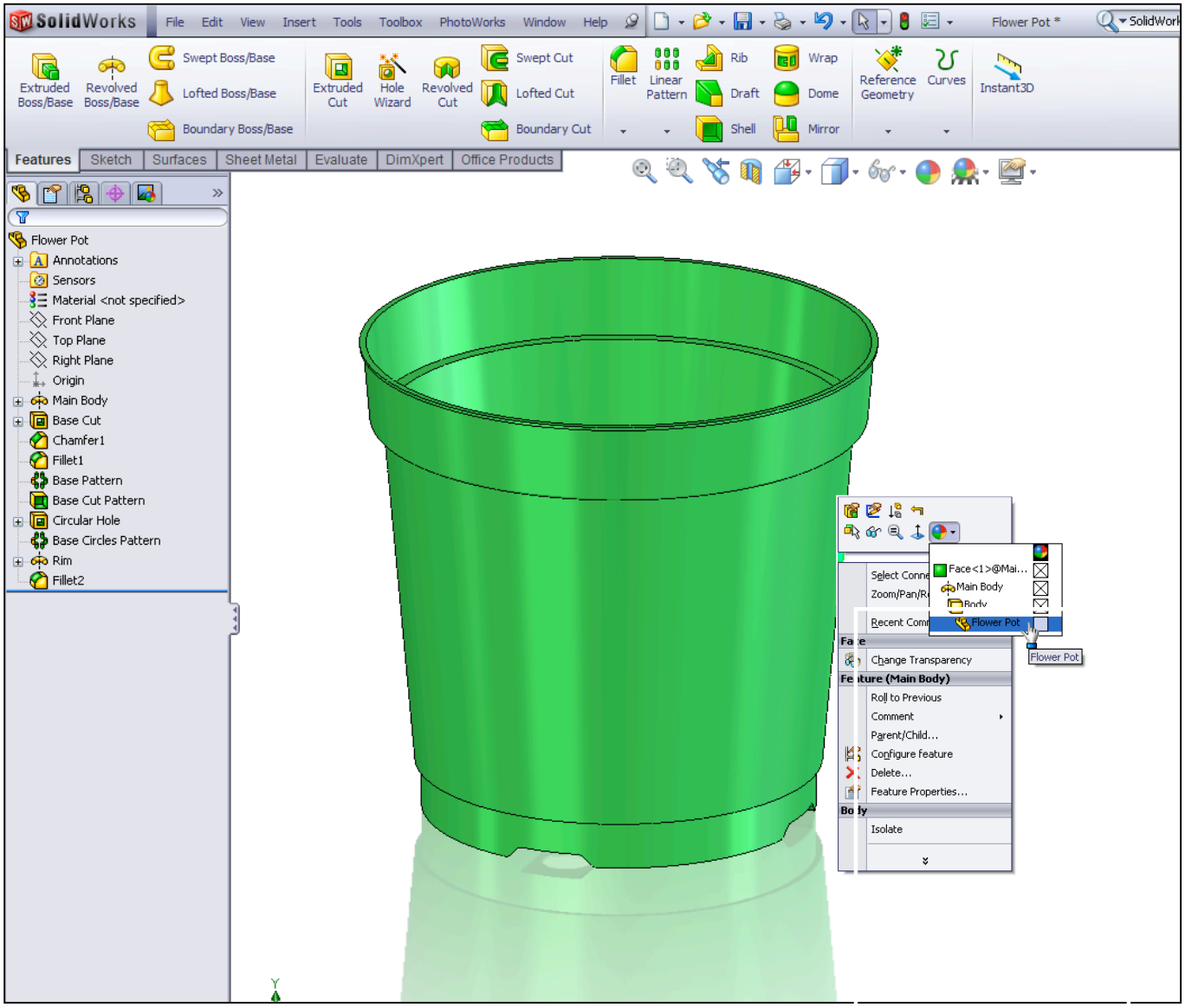

Choose **Plastic, Medium Gloss, green medium gloss plastic.**

The green medium gloss plastic is applied to the entire part.

Choose **OK**

Save the completed model.

Further Exercises

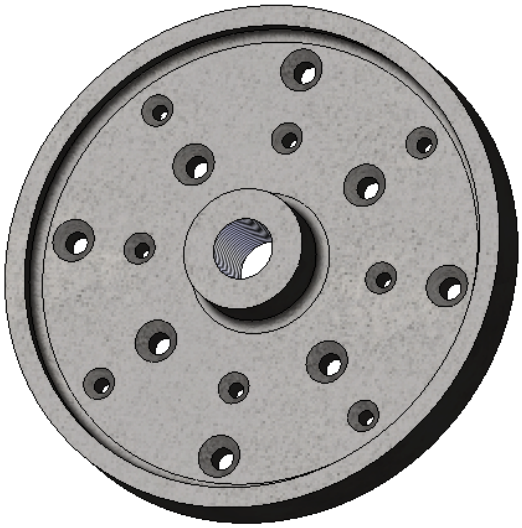

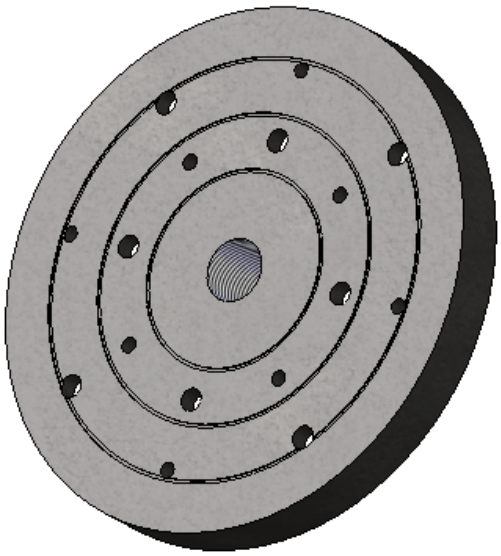

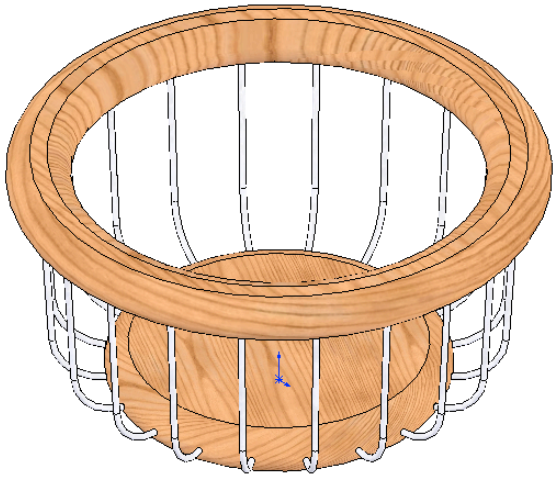

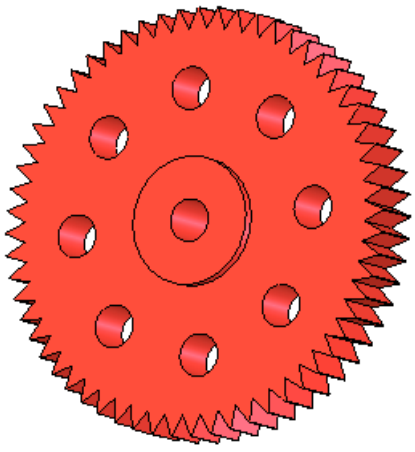

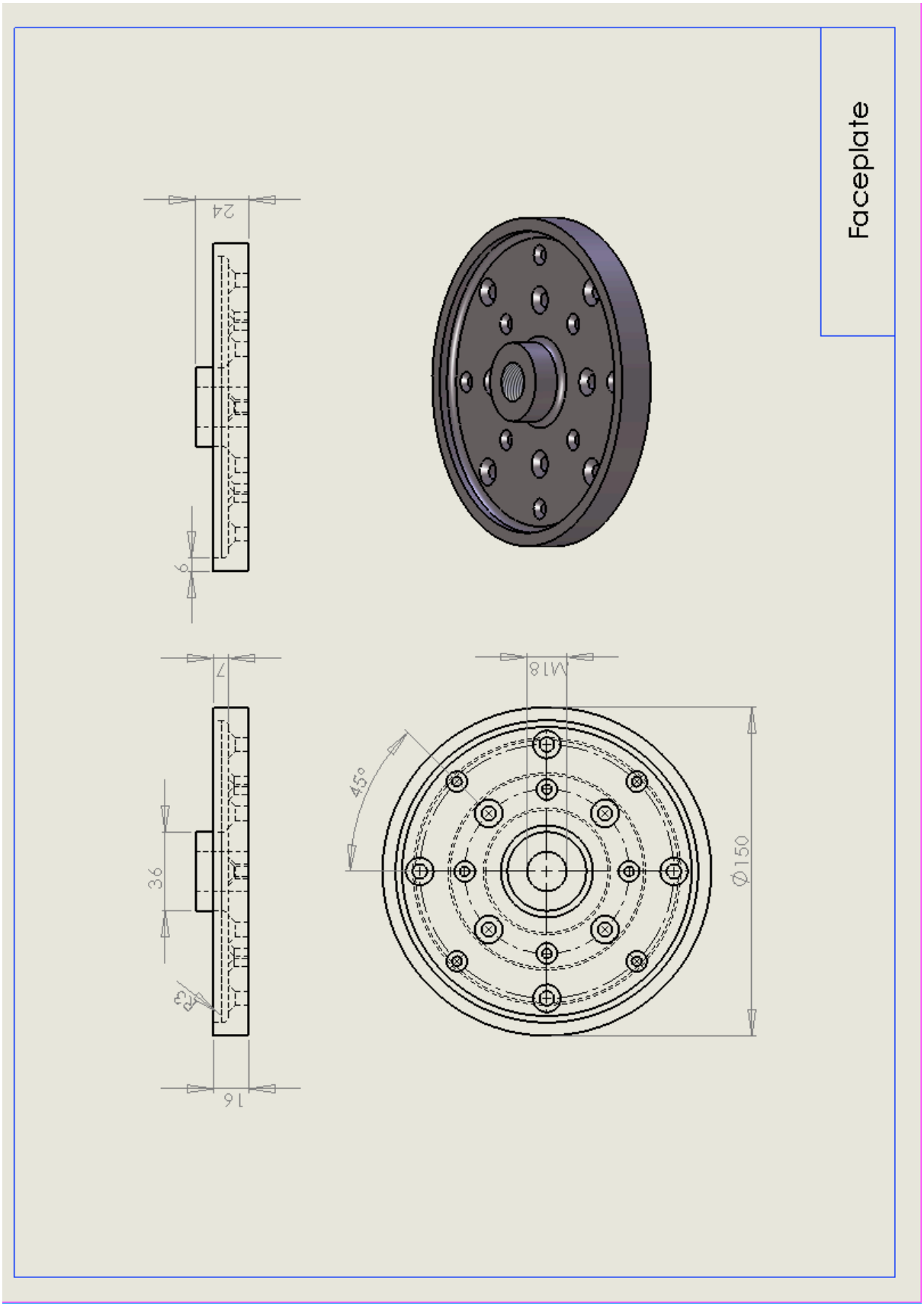
Faceplate
24
6
7
36
3
16
M18
45°
Ø150

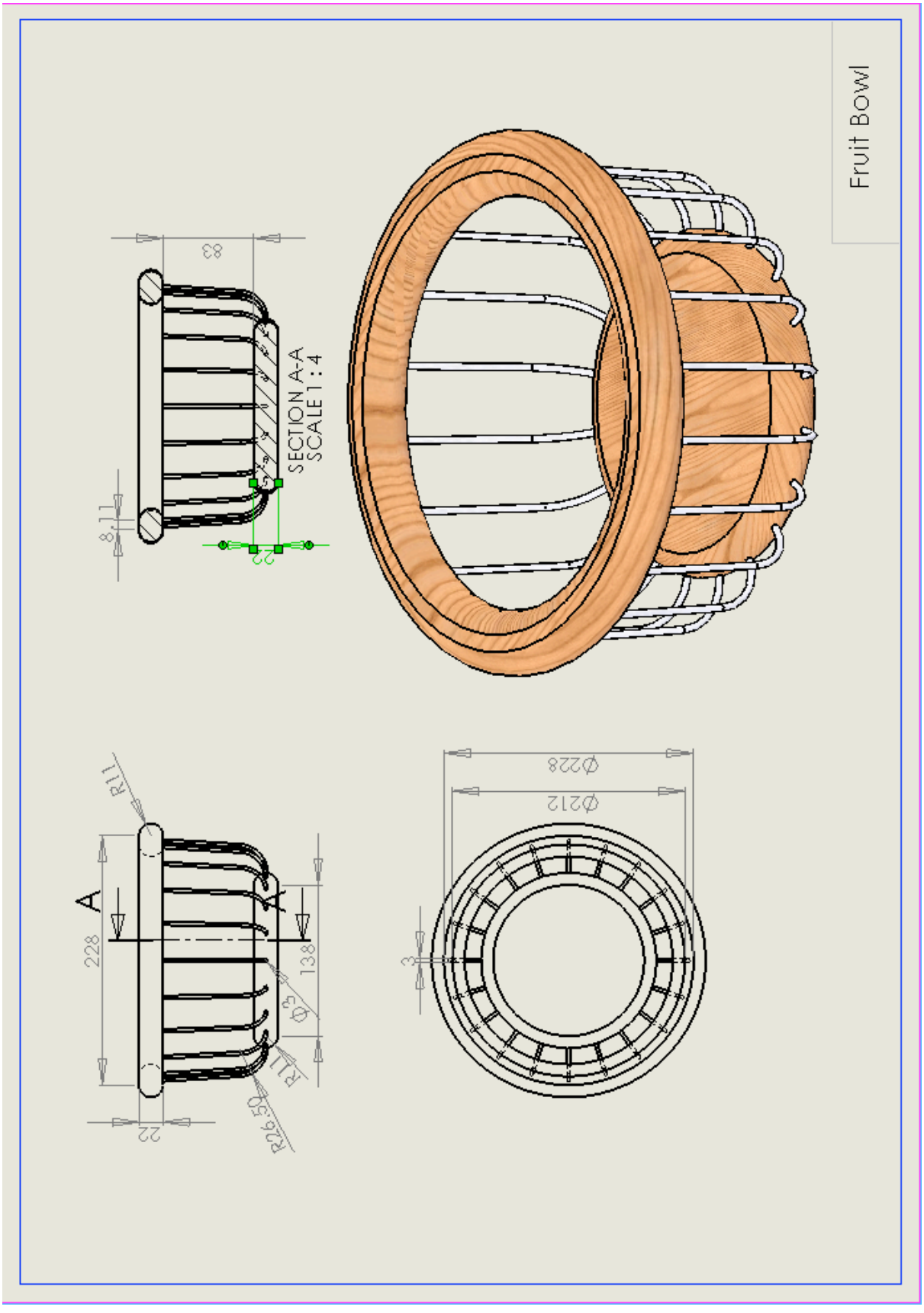
Fruit Bowl
SECTION A-A
SCALE 1 : 4
83
8.11
22
R11
A
228
138
Ø3
R11
R26.50
22
Ø228
Ø212
3

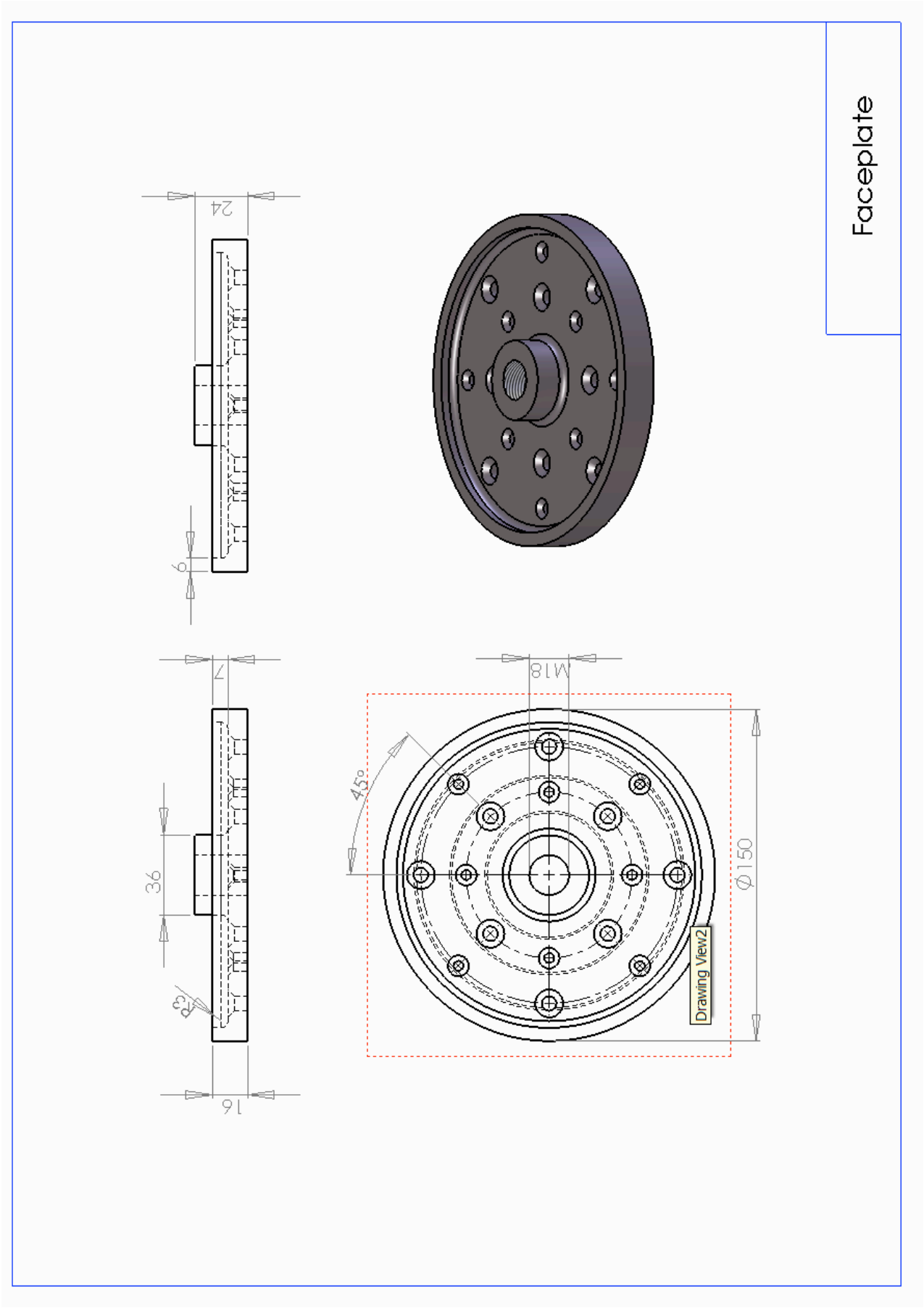
Faceplate
24
6
7
36
3
16
M18
45°
Ø150
Drawing View2

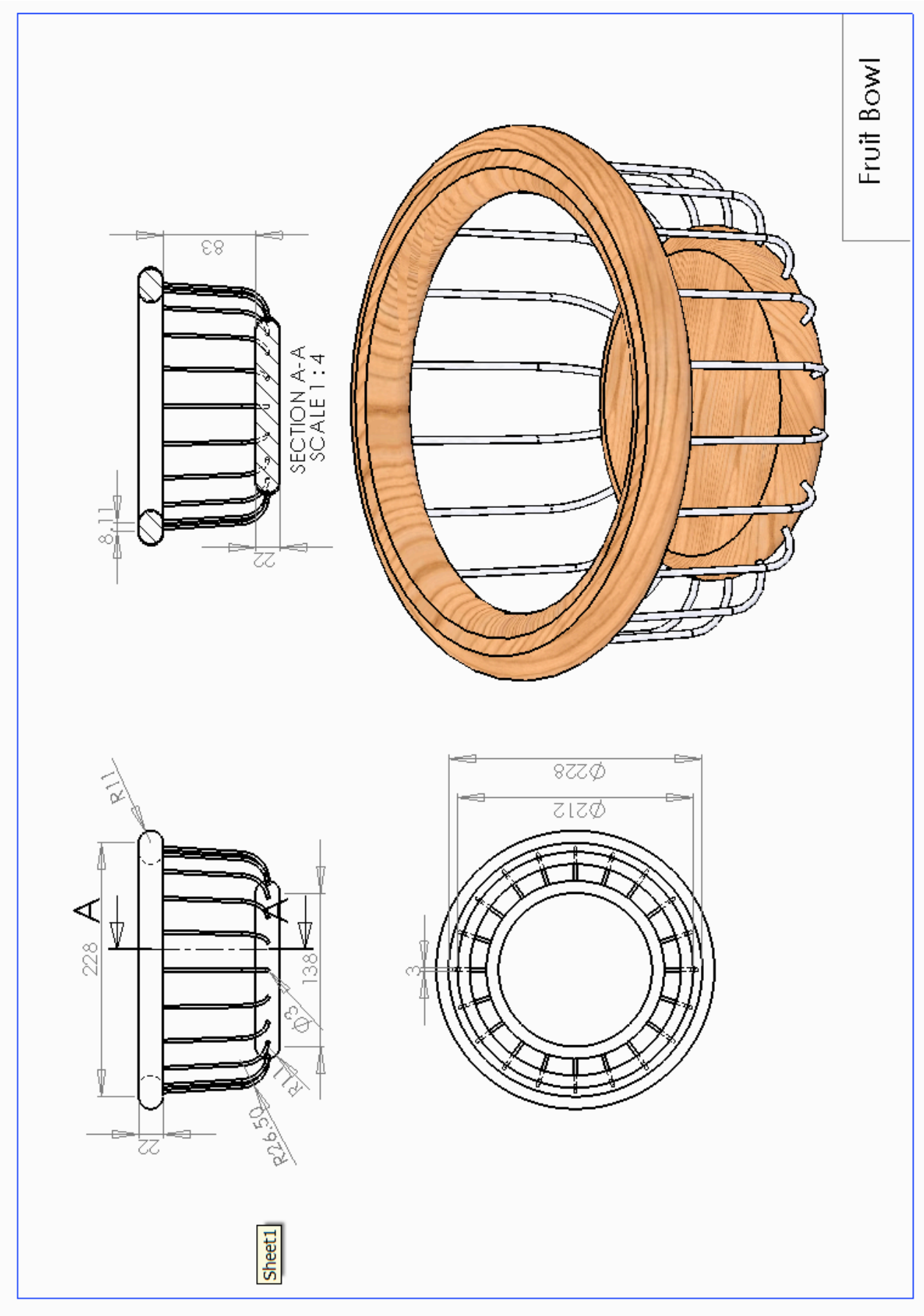
Fruit Bowl
83
SECTION A-A
SCALE 1 : 4
8.11
22
R11
A
228
138
Ø63
R11
R42.50
22
Ø228
Ø212
3
Sheet1

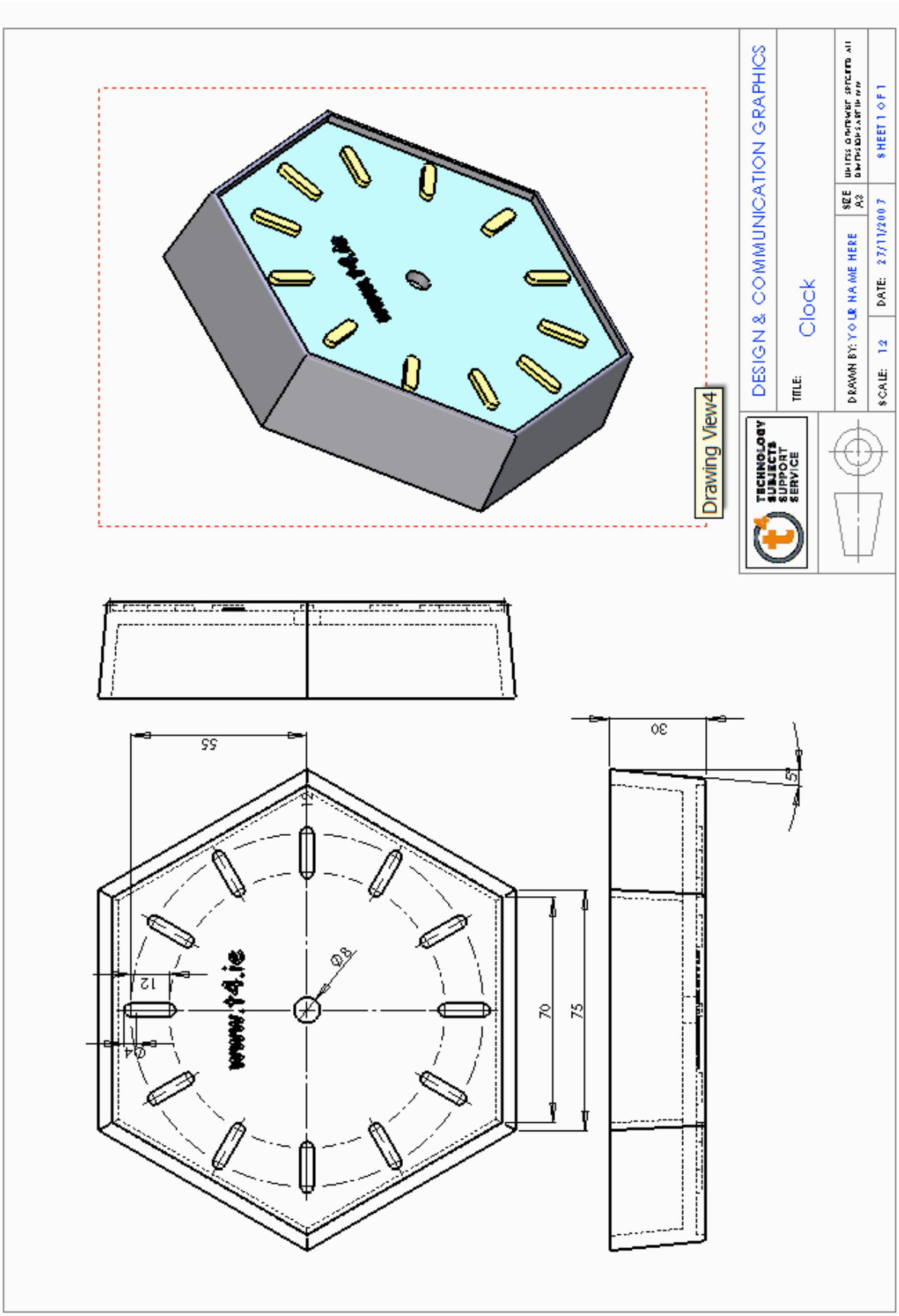
Drawing View4
DESIGN & COMMUNICATION GRAPHICS
TITLE:
Clock
DRAWN BY: YOUR NAME HERE
SIZE A3
DATE: 27/11/2007
SCALE: 1:2
SHEET 1 OF 1
TECHNOLOGY SUBJECTS SUPPORT SERVICE
55
30
5°
12
Ø4
Ø8
70
75
www.t4.ie

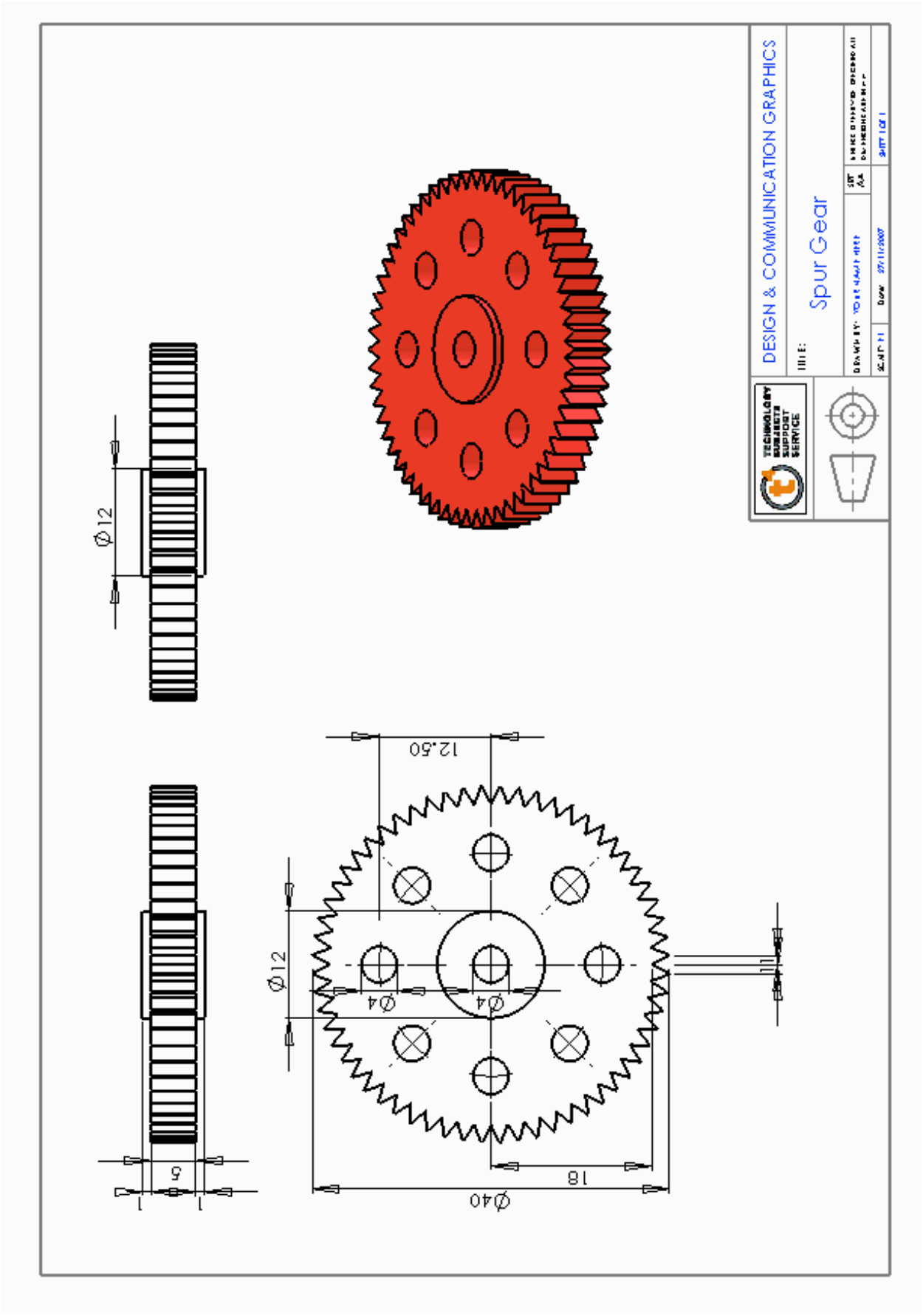
DESIGN & COMMUNICATION GRAPHICS
Spur Gear
Ø12
12.50
Ø12
Ø4
Ø4
18
Ø40
5